RECESSED LUMINAIRES

CCTEvo Extractable 162



Code
1T9137EL

LIGHT COLOUR	LIGHT DISTRIBUTION	OUTPUT
2700K 90	WFL 57°	40.9W 3477lm

POWER SUPPLY CONTROL	COLOUR
220-240Vac ON-OFF	◯

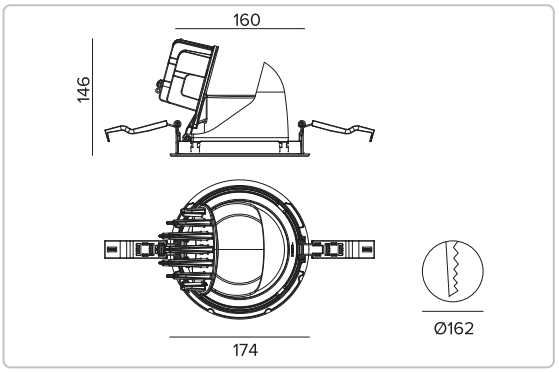

The figures on the drawing are expressed in mm.



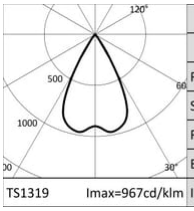

2700K		H(m)	D(m)	Emax(lx)
Ra90			57°	
Fixture Power	41W	1	1.09	4168
Source Flux	4463lm	2	2.19	1042
Fixture Flux	3477lm	3	3.28	463
Efficacy	85lm/W	4	4.37	261
Imax	4315cd	5	5.46	167

Technical Data

Concept

Recessed extractable LED projector.

Source

High efficiency Chip on Board LED Ra90. Ra80 on request.	
Energy efficiency class	E
Nominal power	36W
Nominal flux	4463lm
Colour rendering index	90
Rf	92
Rg	99
CCT nominal	2700K
Lifetime (L80/B10)	72000h tq +25°C
Lifetime (L90/B10)	72000h tq +25°C

TARGETTI

CCIAA Firenze
Share Capital: € 500.000,00
VAT N. (IT): 01537660480
R.E.A: FI-275656

Targetti Sankey S.r.l.
Via Giuseppe Garibaldi, 82
50041 Calenzano (FI)
Italy

Tel: +39 055 37911
targetti.com
targetti@targetti.com

Due to the technological evolution of the electronic components, the data provided may be updated, and as such, confirmation must be requested during the order process.
Luminous flux and power supply have +/-10% tolerances with respect to the indicated value. tq +25°C (CIE 121).

We reserve the right to make technical changes.

Technical Data

Illuminotechnical characteristics

WFL - precision optics with a black silicone cut off ring. Convex faceted highly reflective anodised aluminium reflector and a holographic diffusion filter. UGR<19 (EN 12464-1).

Optic	WFL
Beam angles	WFL
Optical efficiency	77.91%
Fixture flux	3477lm
Luminous efficacy	85lm/W
Photobiological safety	Compliant with RG1 low risk group

Mechanical characteristics

Die-cast white painted anodised aluminium body and dissipator. Friction rotation system on hinges with adjustability of the fixture from -25°/+75° on a vertical plane and can be manually aimed to 355° on a horizontal plane. Trim version with an integrated white ring.

Colour and finish	Plaster white
Dimensions	ØxH 174x146mm
Weight	1.15Kg
Degree of protection	IP20 for recessed part
Degree of protection	IP40 for exposed part

Electrical characteristics

Integrated electronic ON-OFF driver.	
Fixture Power	40.9W
Power supply	220-240Vac 50/60Hz
Insulation Class	CLASS 2
Type of driver / Control	ON-OFF
Driver included	YES
SAFE FLICKER	PstLM=<1 and SVM=<0.4 (IEC TR 61547-1 and IEC TR 63158), to ensure a more comfortable and safe light
Ambient temperature	0°C / +25°C

Installation

Quick tool-free mounting system for false ceiling installation from 0.5 to 30mm.

Notes

110-277Vac version available on request.

Regulations and Certifications

CE

Warranty

5 years.

Warning

Luminaire designed for disposal/recycling at end-of-life. Replaceable (LED only) light source by a professional. Replaceable control gear by a professional.

Accessories

Filter



CODE	Ø
1T1708	70mm

Flat striped glass blade light refractive filter.
This makes the beam take on an oval shape and when combined with spotlights, the light blade appears more prominent.

To be completed with a dedicated holder ring A079.
Cannot be used with versions from 48W (nominal power) - 55W (fixture power).

Grid



CODE	Ø
1T1711	70mm

Anti-glare louver.
Black painted metal honeycomb structure.

To be completed with a dedicated holder ring A079.

Cut-off



CODE	Ø
1T3142	80mm

Cut-off Tube.
Allows for the beam to be focused while removing the fall-off component.

Cannot be used with versions from 48W (nominal power) - 55W (fixture power).

Screen



CODE	COLOUR
A079	●

Black polycarbonate accessory holder ring.

Filter



CODE	Ø
1T1709	70mm

Flat glass wired refractive diffusive filter.
This softens the luminous effect.

To be completed with a dedicated holder ring A079.
Cannot be used with versions from 48W (nominal power) - 55W (fixture power).

Due to the technological evolution of the electronic components, the data provided may be updated, and as such, confirmation must be requested during the order process.
Luminous flux and power supply have +/-10% tolerances with respect to the indicated value. tq +25°C (CIE 121).

We reserve the right to make technical changes.

Screen



CODE	Ø
1T3143	80mm

Black painted anodized diffusive aluminium asymmetric screen.
Complete with blade light filter.
Ideal for a Wall Washer effect.
To be combined with spot and flood optics.

Cannot be used with versions from 48W (nominal power) - 55W (fixture power).

Mounting System



CODE	L
1T9606	2500mm

Anti-fall safety cable to secure the body of the appliance to the building structure.

TARGETTI

CCIAA Firenze
Share Capital: € 500.000,00
VAT N. (IT): 01537660480
R.E.A: FI-275656

Targetti Sankey S.r.l.
Via Giuseppe Garibaldi, 82
50041 Calenzano (FI)
Italy

Tel: +39 055 37911
targetti.com
targetti@targetti.com

Due to the technological evolution of the electronic components, the data provided may be updated, and as such, confirmation must be requested during the order process.
Luminous flux and power supply have +/-10% tolerances with respect to the indicated value. tq +25°C (CIE 121).

We reserve the right to make technical changes.