LIGHTING SYSTEMS

Logico Easy System 100 - Opal / UGR19 - Linear module

Code

T014MW940ELPW

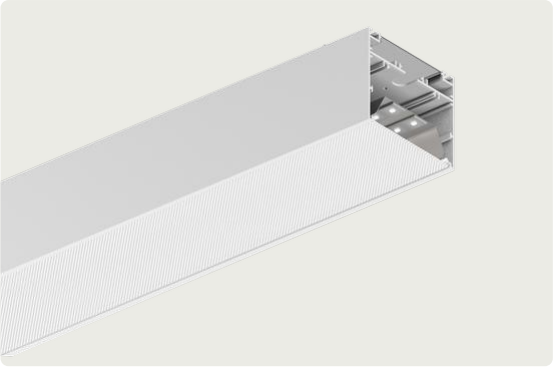

LIGHT COLOUR	LIGHT DISTRIBUTION	OUTPUT
4000K 90	Opal/UGR19	77W 6181-6381lm

POWER SUPPLY CONTROL	COLOUR
220-240Vac ON-OFF	

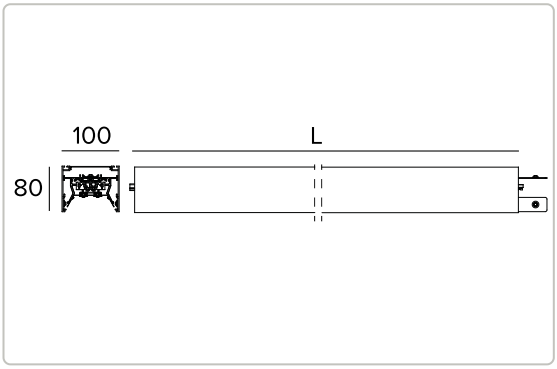

The figures on the drawing are expressed in mm.

7.7 IP40 IK02

The fixture's photometric values can be found on the following pages

Technical Data

Concept

LED luminaire for ceiling or suspended system installation. Linear module.

Source

LED Engine made of linear LED boards Ra90.

Energy efficiency class	E
Nominal power	68W
Nominal flux	See photometries
Colour rendering index	90
Rf	92
Rg	101
CCT nominal	4000K
Lifetime (L80/B10)	100000h tq +25°C
Lifetime (L90/B10)	50000h tq +25°C

Due to the technological evolution of the electronic components, the data provided may be updated, and as such, confirmation must be requested during the order process.
Luminous flux and power supply have +/-10% tolerances with respect to the indicated value. tq +25°C (CIE 121).

We reserve the right to make technical changes.

Technical Data

Illuminotechnical characteristics

Direct emission in two effect variants: diffused light - OPAL optics - and controlled light - UGR19 optics. Diffused light - OPAL optic: optical system made of a steel reflector with white polymer coating and a closing diffuser screen in opal anti-glare polycarbonate supplied in unrollable reels and available as a related code. Controlled light - UGR19 optic: optical system made of a steel reflector with white polymer coating and UGR closing diffuser screen supplied in unrollable reels and available as a related code (UGR<19 and L65<3000 cd/m² EN-12464-1).

Emission	Direct
Optic	Opal/UGR19
Optical efficiency	100%
Fixture flux	See photometries
Luminous efficacy	See photometries
Photobiological safety	Compliant with RG0 exempt risk group

Mechanical characteristics

Painted extruded aluminium body with 100mm section. Upper closing screen in white PVC.

Colour and finish	White
Dimensions	AxBxH 2916x100x80mm
Weight	7.7Kg
Version	Linear
Degree of protection	IP40
Mechanical Resistance	IK02

Electrical characteristics

Integrated electronic ON-OFF driver. "Easy Connection" system for a quick connection between the modules of the system thanks to the pre-assembled plug/socket connection elements. Preset for through wiring allowing to reach a maximum length of 18 meters. Luminaire compliant with EN 60598-2-22 for power supply from a centralised emergency system CPSS (Central Power Supply System), not incorporated in the luminaire - high risk areas excluded. The default power and flux are 100% in AC and 100% in DC.

Fixture Power	77W
Power supply	220-240Vac 50/60Hz
Insulation Class	CLASS 1
Type of driver / Control	ON-OFF
Driver included	YES
SAFE FLICKER	PstLM=<1 and SVM=<0.4 (IEC TR 61547-1 and IEC TR 63158), to ensure a more comfortable and safe light
Ambient temperature	0°C / +25°C
Relative humidity UR	<85%

Installation

To be completed with polycarbonate end caps, mounting systems for surface or suspended application and terminal block for connection to the power line.

Notes

For angular configurations L light modules and the L blind joint accessory are avaiable. Commissioning of the control system via free APP; the intervention of a specialist technician can be quoted on request.

Technical Data

Regulations and Certifications

CE

Warranty

5 years.

Warning

Luminaire designed for disposal/recycling at end-of-life. Replaceable (LED only) light source by a professional. Replaceable control gear by a professional.

Photometries

OP

Nominal flux	6381lm
Fixture flux	6381lm
Luminous efficacy	83lm/W

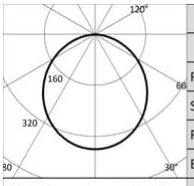

4000K		H(m)	D(m)	Emax(lx)
Ra90			109°	
Fixture Power	77W	1	2.82	2293
Source Flux	6381lm	2	5.64	573
Fixture Flux	6381lm	3	8.46	255
Efficacy	83lm/W	4	11.28	143
G0301A Imax=359cd/klm	Imax 2294cd	5	14.10	92

UGR

Nominal flux	6181lm
Fixture flux	6181lm
Luminous efficacy	80lm/W

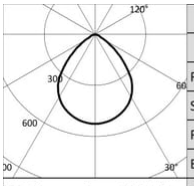

4000K		H(m)	D(m)	Emax(lx)
Ra90			88°	
Fixture Power	77W	1	1.94	3241
Source Flux	6181lm	2	3.88	810
Fixture Flux	6182lm	3	5.83	360
Efficacy	80lm/W	4	7.77	203
G0301 Imax=525cd/klm	Imax 3242cd	5	9.71	130

Related codes

Screen

CODE	DIMENSIONS
A001LL1	L=6m
A001LL2	L=9m
A001LL3	L=15m

UGR19 screen (Direct Emission).

For LOGICO EASY System 100 - UGR19.

CODE	DIMENSIONS
A002LL1	L=6m
A002LL2	L=9m
A002LL3	L=15m

OPAL screen (Direct Emission).

For LOGICO EASY System 100 - OPAL.

Accessories

End Caps

CODE	COLOUR
A003L1W	◯

End caps (2 pieces).

For LOGICO EASY System 100.

Canopy

CODE	COLOUR
A004W	◯

Canopy with 5 poles terminal block.
Feeding cable not included.

Cover Panel

CODE	COLOUR
A005LW	◯

Joint for screens.
To be used for configurations longer than 15 meters.

For LOGICO EASY System 100.

TARGETTI

CCIAA Firenze
Share Capital: € 500.000,00
VAT N. (IT): 01537660480
R.E.A: FI-275656

Targetti Sankey S.r.l.
Via Giuseppe Garibaldi, 82
50041 Calenzano (FI)
Italy

Tel: +39 055 37911
targetti.com
targetti@targetti.com

Due to the technological evolution of the electronic components, the data provided may be updated, and as such, confirmation must be requested during the order process.
Luminous flux and power supply have +/-10% tolerances with respect to the indicated value. tq +25°C (CIE 121).

We reserve the right to make technical changes.

Accessories

Bracket

CODE
A006L

Bracket for ceiling installation (2 pieces).
Two brackets needed for each lighting module.

For LOGICO EASY 100.

CODE
A007L

Bracket with adjustment system for suspended installation (2 pieces).
Two brackets needed for each lighting module.

For LOGICO EASY 100.

Suspension

CODE	VERSION
A008T	L=6m
A008U	L=5m
A008V	L=4m
A008W	L=3m
A008X	L=2m
A008Y	L=1m
A008Z	L=0,5m

Suspension cable (2 pieces).

Terminal Box

CODE	VERSION
A009Z	3 Poli ON-OFF

Terminal block (plug/socket).
One for each power supply.

A009Z - For LOGICO EASY 37 | 57 | 100.

Targetti Sankey S.r.l.
Via Giuseppe Garibaldi, 82
50041 Calenzano (FI)
Italy

Tel: +39 055 37911
targetti.com
targetti@targetti.com

Due to the technological evolution of the electronic components, the data provided may be updated, and as such, confirmation must be requested during the order process.
Luminous flux and power supply have +/-10% tolerances with respect to the indicated value. tq +25°C (CIE 121).

We reserve the right to make technical changes.