IN-GROUND LUMINAIRES

Jedi Compact Outdoor Recessed Louvre - Integrated driver - L. 1185mm

Code
1E3721EL



LIGHT COLOUR	LIGHT DISTRIBUTION	OUTPUT
2700K 80	Grazing 80° / 13°	53W 3424lm

POWER SUPPLY CONTROL	COLOUR
220-240Vac ON-OFF	

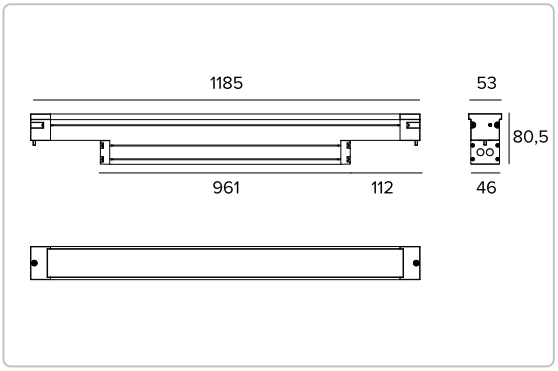

The figures on the drawing are expressed in mm.

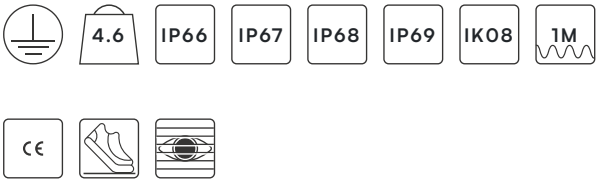

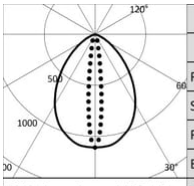

2700K		H(m)	D1(m)	D2(m)	Emax(lx)
Ra80			80°	13°	
Fixture Power	53W	1	1.68	0.23	7145
Source Flux	6460lm	2	3.36	0.46	1786
Fixture Flux	3424lm	3	5.04	0.68	794
Efficacy	65lm/W	4	6.72	0.91	447
Imax	7145cd	5	8.40	1.14	286

Technical Data

Concept

Recessed linear LED projector.

Source

High Power High Efficiency Ra80 linear LED board. Ra90 on request.	
Energy efficiency class	E
Nominal power	48W
Nominal flux	6460lm
Colour rendering index	80
Rf	83
Rg	97.3
CCT nominal	2700K
Lifetime (L80/B10)	100000h tq +25°C
Lifetime (L90/B10)	59000h tq +25°C

TARGETTI

CCIAA Firenze
Share Capital: € 500.000,00
VAT N. (IT): 01537660480
R.E.A: FI-275656

Targetti Sankey S.r.l.
Via Giuseppe Garibaldi, 82
50041 Calenzano (FI)
Italy

Tel: +39 055 37911
targetti.com
targetti@targetti.com

Due to the technological evolution of the electronic components, the data provided may be updated, and as such, confirmation must be requested during the order process.
Luminous flux and power supply have +/-10% tolerances with respect to the indicated value. tq +25°C (CIE 121).

We reserve the right to make technical changes.

Technical Data

Illuminotechnical characteristics

Internal optical system composed of a primary cylindrical glass lens, a high reflectance anodised aluminium reflector and an integrated holographic filter. Grazing light version.

Optic	Grazing
Beam angles	GRZ
Optical efficiency	53%
Fixture flux	3424lm
Luminous efficacy	65lm/W
Photobiological safety	Compliant with RG1 low risk group

Mechanical characteristics

Extruded anodised aluminium 15µ body. Extra clear 5mm thick glass flat screen.

Colour and finish	Aluminium
Dimensions	AxBxH 1185x53x81mm
Weight	4.6Kg
Version	Louvre - Integrated driver
Degree of protection	IP66,IP67,IP68,IP69
Mechanical Resistance	IK08

Electrical characteristics

Integrated driver version. Complete with electronic ON-OFF power supply. Version with an integrated Louver effect grid. Pre-cabled with a 1 metre 3x1mm² H07RN-F cable. Luminaire compliant with EN 60598-2-22 for power supply from a centralised emergency system CPSS (Central Power Supply System), not incorporated in the luminaire - high risk areas excluded. The default power and flux are 100% in AC and 100% in DC.

Fixture Power	53W
Power supply	220-240Vac 50/60Hz
Insulation Class	CLASS 1
Type of driver / Control	ON-OFF
Driver included	YES
SAFE FLICKER	PstLM=<1 and SVM=<0.4 (IEC TR 61547-1 and IEC TR 63158), to ensure a more comfortable and safe light
Ambient temperature	-25°C / +35°C

Installation

To be completed with an anodised aluminium outer casing suitable for in-line installation and external looping.

Notes

Uses the "Waterblock Smart" technical solution that involves resin coating the connection cables, limiting the risk of humidity reaching the driver or the fixture. 110-277Vac version available on request. IP68: the projector is not suitable for permanent underwater installation but can withstand temporary accidental immersion to a depth of 2 metres (max.24h). IP69: IEC/EN 60529 standard compliant.

Regulations and Certifications

CE

Technical Data

Warranty

5 years.

Warning

Luminaire designed for disposal/recycling at end-of-life. Replaceable (LED only) light source by a professional. Replaceable control gear by a professional.

TARGETTI

CCIAA Firenze
Share Capital: € 500.000,00
VAT N. (IT): 01537660480
R.E.A: FI-275656

Targetti Sankey S.r.l.
Via Giuseppe Garibaldi, 82
50041 Calenzano (FI)
Italy

Tel: +39 055 37911
targetti.com
targetti@targetti.com

Due to the technological evolution of the electronic components, the data provided may be updated, and as such, confirmation must be requested during the order process.
Luminous flux and power supply have +/-10% tolerances with respect to the indicated value. tq +25°C (CIE 121).

We reserve the right to make technical changes.

Related codes

Insertion Box

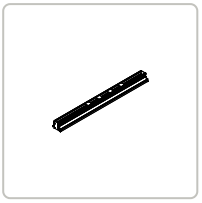

CODE	P	H	L
1E3735	96mm	88mm	1189mm

Aluminium outer casing for Jedi Compact with integrated driver.

Accessories

Tool



CODE

1E3305

Tightening wrench for the connector kit.

Connector



CODE

1E2769

Linear connection box IP66/IP68.
5 poles max. wire section 1.5mm².
Cable diameter range from 7 to 12mm.



CODE

1E2494

Multiple connection box IP68.
1 IN - 3 OUT 4 poles max. wire section 2.5mm².
Cable diameter range from 6 to 12mm.

Surge protector

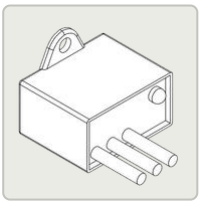

CODE

A013A

Surge protector compatible with CLASS I lighting fixtures.
Operating voltage 230-277Vac.
SPD type 2+3.
Max surge protection 10kV.
CLASS I
IP67

TARGETTI

CCIAA Firenze
Share Capital: € 500.000,00
VAT N. (IT): 01537660480
R.E.A: FI-275656

Targetti Sankey S.r.l.
Via Giuseppe Garibaldi, 82
50041 Calenzano (FI)
Italy

Tel: +39 055 37911
targetti.com
targetti@targetti.com

Due to the technological evolution of the electronic components, the data provided may be updated, and as such, confirmation must be requested during the order process.
Luminous flux and power supply have +/-10% tolerances with respect to the indicated value. tq +25°C (CIE 121).

We reserve the right to make technical changes.