RECESSED LUMINAIRES

Oz Stand Alone Trimless - Small 3x - 80x30mm

Code
1T9026



LIGHT COLOUR	LIGHT DISTRIBUTION	OUTPUT
2700K 90	Elliptical Longitudinal 48° / 17°	5.2W 320lm

POWER SUPPLY CONTROL
600mA

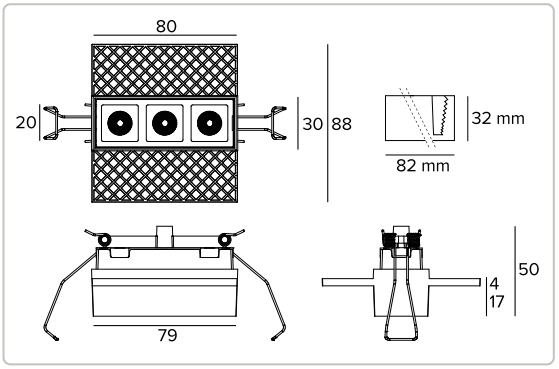

The figures on the drawing are expressed in mm.

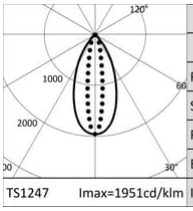

2700K		H(m)	D1(m)	D2(m)	Emax(lx)
Ra90			48°	17°	
Fixture Power	5W	1	0.90	0.30	880
Source Flux	451lm	2	1.80	0.61	220
Fixture Flux	320lm	3	2.70	0.91	98
Efficacy	62lm/W	4	3.60	1.22	55
Imax	880cd	5	4.50	1.52	35

TS1247 Imax=1951cd/klm

Technical Data

Concept

Recessed trimless LED floodlights.

Source

Hugh efficiency Ra90 LED Emitter.	
Energy efficiency class	F
Nominal power	5,2W
Nominal flux	451lm
Colour rendering index	90
Rf	87.6
Rg	103.9
CCT nominal	2700K
SDCM	2
Lifetime (L80/B10)	100000h tq +25°C
Lifetime (L90/B10)	72000h tq +25°C

TARGETTI

CCIAA Firenze
Share Capital: € 500.000,00
VAT N. (IT): 01537660480
R.E.A: FI-275656

Targetti Sankey S.r.l.
Via Giuseppe Garibaldi, 82
50041 Calenzano (FI)
Italy

Tel: +39 055 37911
targetti.com
targetti@targetti.com

Due to the technological evolution of the electronic components, the data provided may be updated, and as such, confirmation must be requested during the order process.
Luminous flux and power supply have +/-10% tolerances with respect to the indicated value. tq +25°C (CIE 121).

We reserve the right to make technical changes.

Technical Data

Illuminotechnical characteristics

ELL optic. A metallised polycarbonate reflector, a holographic filter and a black polycarbonate frame. The fixture is suitable for installation in workplaces UGR<13/22 (EN12464-1).

Optic	Elliptical Longitudinal
Beam angles	ELL
Optical efficiency	70.92%
Fixture flux	320lm
Luminous efficacy	62lm/W
Photobiological safety	Compliant with RG1 low risk group

Mechanical characteristics

Black die-cast anodised aluminium frame. 3X Small version.

Dimensions	AxBxH 80x30x50mm
Weight	0.13Kg
Version	3X
Degree of protection	IP20

Electrical characteristics

To be completed with electronic ON-OFF or DALI driver available as accessory.

Fixture Power	5.2W
Power supply	600mA
Insulation Class	CLASS 3
Driver included	NO
Ambient temperature	0°C / +25°C

Installation

Trimless installation system suitable for plasterboard panels, 13, 15, and 17mm.

Notes

Casambi control system available via accessory (only for products with DALI driver). Values related to the power consumption of the fixture do not take into account the consumption of the accessory driver, which depends on the choice of driver. 110-277Vac version available on request. Commissioning of the control system via free APP; the intervention of a specialist technician can be quoted on request.

Regulations and Certifications

CE

Warranty

5 years.

Warning

Luminaire designed for disposal/recycling at end-of-life. Replaceable (LED only) light source by a professional.

Related codes

Power Supply

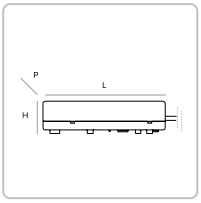

CODE	IP	OUTPUT CURRENT	POWER SUPPLY	POWER	LXHXP
1T8172EL	IP20	600mA	110-240Vac	20W	110x22x52mm

Electronic ON-OFF power supply.

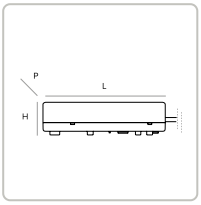

CODE	IP	OUTPUT CURRENT	POWER SUPPLY	POWER	LXHXP
1T8172DA	IP20	600mA	230Vac	20W	156x26x52mm

DALI power supply.

Accessories

Emergency Kit



CODE

A059

Emergency kit composed of an inverter a LIFePO4 battery and a LED Green indicator.
Allows permanent EP emergency use of the fixture it is connected to.
The 1h or 3h autonomy can be selected by configuring the fixture.
The batteries take 12h to completely recharge.
LED Green indicator wired to the inverter through single-core cables L= 800mm.
Emergency kit for fixtures that comply with EN 60598-2-22 standard, high risk areas excluded.
Battery size 160x54x30 mm.
Inverter size 165x40x25 mm.

Control systems



CODE

1T5349

IP20 wireless control unit with DALI interface.
It generates a local DALI2 bus, enhabling a direct connection to a DALI interface LED driver.
The module can only be used in a closed system and cannot be connected to an existing DALI network.
The module is wireless controlled using a Casambi app for smartphones and tablets using Bluetooth 5.0 technology.
The devices automatically create an adaptive, robust, and reliable wireless mesh network, allowing for the easy and efficient management of a high number of fixtures.
The control unit is preset to the DALI 1CH profile, maning the device can control a single DALI driver with broadcast commands.
In addition to the DALI broadcast, other operating modes are available, such as:

- Button (normally open)
- Control unit 0/1-10V
- Control unit DALI Tunable White DT8
- Presence sensor

If different from the preset mode, the desired operating profile must be set directly by the user before coupling the control unit to the Casambi network.
LxHxP=102x25x36mm.

Due to the technological evolution of the electronic components, the data provided may be updated, and as such, confirmation must be requested during the order process.
Luminous flux and power supply have +/-10% tolerances with respect to the indicated value. tq +25°C (CIE 121).

We reserve the right to make technical changes.



CODE

2T0131

IP20 Extender for wireless control of LED driver with dimming DALI (or 1-10V) interface based on Casambi technology.
It has a DALI2 output with the capacity to control up to 40 lighting fixtures.
With the addition of a further external BUS DALI power supply it is possible to control up to 64 fixtures.
IP20 Extender is preset to the DALI broadcast profile, meaning all the luminaires connected to it are dimmable at the same level.
In addition to the DALI broadcast other operating modes are available, such as:

- EXTENDER DALI 8CH
- EXTENDER DALI Tunable White
- EXTENDER 0/1-10V
- EXTENDER DALI 4CH
- EXTENDER DALI DT8 Tunable White

If different from the preset mode, the desired operating profile must be set directly by the user before coupling the extender to the Casambi network.
LxHxP=130x22x30mm.

Due to the technological evolution of the electronic components, the data provided may be updated, and as such, confirmation must be requested during the order process.
Luminous flux and power supply have +/-10% tolerances with respect to the indicated value. tq +25°C (CIE 121).

We reserve the right to make technical changes.