RECESSED LUMINAIRES

Oz Stand Alone Trimless - Large 3x - 153x53mm

Code
1T7851DA



LIGHT COLOUR	LIGHT DISTRIBUTION	OUTPUT
3000K 90	MWFL 50°	19.3W 2023lm

POWER SUPPLY CONTROL

220-240Vac
DALI

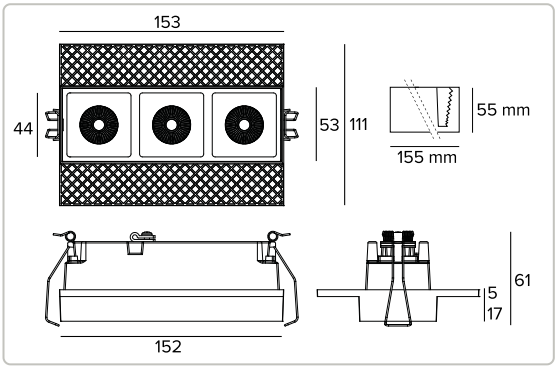

The figures on the drawing are expressed in mm.



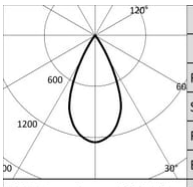

3000K		H(m)	D(m)	Emax(lx)
Ra90			50°	
Fixture Power	19W	1	0.93	3280
Source Flux	2615lm	2	1.85	820
Fixture Flux	2023lm	3	2.78	364
Efficacy	105lm/W	4	3.71	205
Imax	3280cd	5	4.64	131

Technical Data

Concept

Recessed trimless LED floodlights.

Source

High efficiency Chip on Board LED Ra90.	
Energy efficiency class	D
Nominal power	17W
Nominal flux	2615lm
Colour rendering index	90
Rf	92
Rg	101
CCT nominal	3000K
SDCM	2
Lifetime (L80/B10)	72000h tq +25°C
Lifetime (L90/B10)	72000h tq +25°C

TARGETTI

CCIAA Firenze
Share Capital: € 500.000,00
VAT N. (IT): 01537660480
R.E.A: FI-275656

Targetti Sankey S.r.l.
Via Giuseppe Garibaldi, 82
50041 Calenzano (FI)
Italy

Tel: +39 055 37911
targetti.com
targetti@targetti.com

Due to the technological evolution of the electronic components, the data provided may be updated, and as such, confirmation must be requested during the order process.
Luminous flux and power supply have +/-10% tolerances with respect to the indicated value. tq +25°C (CIE 121).

We reserve the right to make technical changes.

Technical Data

Illuminotechnical characteristics

MWFL optic. Anodised aluminium reflector and black polycarbonate frame. The light is suitable for installation in work environments UGR<17 (EN12464-1).

Optic	MWFL
Beam angles	MWFL
Optical efficiency	77.37%
Fixture flux	2023lm
Luminous efficacy	105lm/W
Photobiological safety	Compliant with RG1 low risk group

Mechanical characteristics

Black die-cast anodised aluminium frame. 3X Large version.

Dimensions	AxBxH 153x53x61mm
Weight	0.6Kg
Version	3X
Degree of protection	IP20

Electrical characteristics

Complete with a DALI driver. Luminaire compliant with EN 60598-2-22 for power supply from a centralised emergency system CPSS (Central Power Supply System), not incorporated in the luminaire - high risk areas excluded. The default power and flux are 100% in AC and 100% in DC.

Fixture Power	19.3W
Power supply	220-240Vac 50/60Hz
Insulation Class	CLASS 2
Type of driver / Control	DALI - PUSH
Driver included	YES
SAFE FLICKER	PstLM=<1 and SVM=<0.4 (IEC TR 61547-1 and IEC TR 63158), to ensure a more comfortable and safe light
Ambient temperature	0°C / +25°C

Installation

Trimless installation system suitable for plasterboard panels, 13, 15, and 17mm.

Notes

Casambi control system available using a dedicated accessory. 110-277Vac version available on request. Commissioning of the control system via free APP; the intervention of a specialist technician can be quoted on request.

Regulations and Certifications

CE

Warranty

5 years.

Technical Data

Warning

Luminaire designed for disposal/recycling at end-of-life. Replaceable (LED only) light source by a professional. Replaceable control gear by a professional.

TARGETTI

CCIAA Firenze
Share Capital: € 500.000,00
VAT N. (IT): 01537660480
R.E.A: FI-275656

Targetti Sankey S.r.l.
Via Giuseppe Garibaldi, 82
50041 Calenzano (FI)
Italy

Tel: +39 055 37911
targetti.com
targetti@targetti.com

Due to the technological evolution of the electronic components, the data provided may be updated, and as such, confirmation must be requested during the order process.
Luminous flux and power supply have +/-10% tolerances with respect to the indicated value. tq +25°C (CIE 121).

We reserve the right to make technical changes.

Accessories

Emergency Kit



CODE

A059

Emergency kit composed of an inverter a LIFePO4 battery and a LED Green indicator.
Allows permanent EP emergency use of the fixture it is connected to.
The 1h or 3h autonomy can be selected by configuring the fixture.
The batteries take 12h to completely recharge.
LED Green indicator wired to the inverter through single-core cables L= 800mm.
Emergency kit for fixtures that comply with EN 60598-2-22 standard, high risk areas excluded.
Battery size 160x54x30 mm.
Inverter size 165x40x25 mm.

Control systems



CODE

1T5349

IP20 wireless control unit with DALI interface.
It generates a local DALI2 bus, enhabling a direct connection to a DALI interface LED driver.
The module can only be used in a closed system and cannot be connected to an existing DALI network.
The module is wireless controlled using a Casambi app for smartphones and tablets using Bluetooth 5.0 technology.
The devices automatically create an adaptive, robust, and reliable wireless mesh network, allowing for the easy and efficient management of a high number of fixtures.
The control unit is preset to the DALI 1CH profile, maning the device can control a single DALI driver with broadcast commands.
In addition to the DALI broadcast, other operating modes are available, such as:

- Button (normally open)
- Control unit 0/1-10V
- Control unit DALI Tunable White DT8
- Presence sensor

If different from the preset mode, the desired operating profile must be set directly by the user before coupling the control unit to the Casambi network.
LxHxP=102x25x36mm.



CODE

2T0131

IP20 Extender for wireless control of LED driver with dimming DALI (or 1-10V) interface based on Casambi technology.
It has a DALI2 output with the capacity to control up to 40 lighting fixtures.
With the addition of a further external BUS DALI power supply it is possible to control up to 64 fixtures.
IP20 Extender is preset to the DALI broadcast profile, meaning all the luminaires connected to it are dimmable at the same level.
In addition to the DALI broadcast other operating modes are available, such as:

- EXTENDER DALI 8CH
- EXTENDER DALI Tunable White
- EXTENDER 0/1-10V
- EXTENDER DALI 4CH
- EXTENDER DALI DT8 Tunable White

If different from the preset mode, the desired operating profile must be set directly by the user before coupling the extender to the Casambi network.
LxHxP=130x22x30mm.

Due to the technological evolution of the electronic components, the data provided may be updated, and as such, confirmation must be requested during the order process.
Luminous flux and power supply have +/-10% tolerances with respect to the indicated value. tq +25°C (CIE 121).

We reserve the right to make technical changes.