TRACK PROJECTORS

Capsule Ø 70



Code
1TD0007EL

LIGHT COLOUR	LIGHT DISTRIBUTION	OUTPUT
3000K 90	Multioptic 18°, 33°	33W 3449-3609lm

POWER SUPPLY CONTROL	COLOUR
220-240Vac ON-OFF	

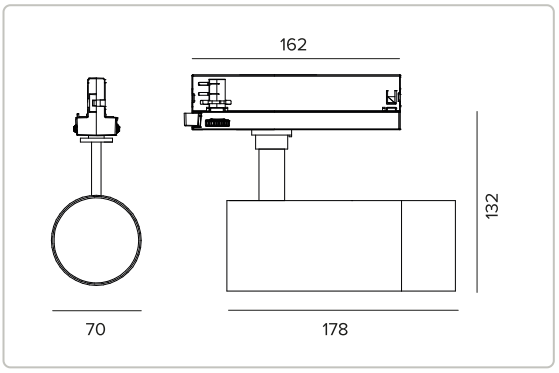

The figures on the drawing are expressed in mm.

0.68 IP20

The fixture's photometric values can be found on the following pages

Technical Data

Concept

Adjustable LED projector.

Source

High efficiency Chip on Board LED Ra90.	
Energy efficiency class	C
Nominal power	29W
Nominal flux	3976lm
Colour rendering index	90
CCT nominal	3000K
Lifetime (L80/B10)	56000h tq +25°C
Lifetime (L90/B10)	56000h tq +25°C

TARGETTI

CCIAA Firenze
Share Capital: € 500.000,00
VAT N. (IT): 01537660480
R.E.A: FI-275656

Targetti Sankey S.r.l.
Via Giuseppe Garibaldi, 82
50041 Calenzano (FI)
Italy

Tel: +39 055 37911
targetti.com
targetti@targetti.com

Due to the technological evolution of the electronic components, the data provided may be updated, and as such, confirmation must be requested during the order process.
Luminous flux and power supply have +/-10% tolerances with respect to the indicated value. tq +25°C (CIE 121).

We reserve the right to make technical changes.

Technical Data

Illuminotechnical characteristics

Optical unit equipped with a FL lens inside the product and an interchangeable SP lens.

Optic	Multioptic
Beam angles	SP, FL
Optical efficiency	See photometries
Fixture flux	See photometries
Luminous efficacy	See photometries
Photobiological safety	Compliant with RG1 low risk group

Mechanical characteristics

Black painted die-cast aluminium body. Optical frame adjustable from 0° to 90° on the vertical plane, 355° on the horizontal plane.

Colour and finish	Black
Dimensions	ØxH 70x178mm
Weight	0.68Kg
Version	7
Degree of protection	IP20

Electrical characteristics

Integrated electronic power supply.

Fixture Power	33W
Power supply	220-240Vac 50/60Hz
Insulation Class	CLASS 2
Type of driver / Control	ON-OFF
Driver included	YES
SAFE FLICKER	PstLM=<1 and SVM=<0.4 (IEC TR 61547-1 and IEC TR 63158), to ensure a more comfortable and safe light
Ambient temperature	0°C / +25°C

Notes

Lens optic with 24° opening available as an accessory.

Regulations and Certifications

CE

Warranty

5 years.

Warning

Luminaire designed for disposal/recycling at end-of-life. Replaceable (LED only) light source by a professional. Replaceable control gear by a professional.

Due to the technological evolution of the electronic components, the data provided may be updated, and as such, confirmation must be requested during the order process.
Luminous flux and power supply have +/-10% tolerances with respect to the indicated value. tq +25°C (CIE 121).

We reserve the right to make technical changes.

Photometries

SP

Fixture flux	3449lm
Luminous efficacy	105lm/W
Optical efficiency	86.75%

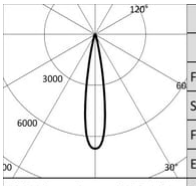

3000K		H(m)	D(m)	Emax(lx)
Ra90			18°	
Fixture Power	33W	1	0.32	26677
Source Flux	3976lm	2	0.65	6669
Fixture Flux	3449lm	3	0.97	2964
Efficacy	105lm/W	4	1.29	1667
Imax	26677cd	5	1.62	1067

TS1694 Imax=6710cd/klm

FL

Fixture flux	3609lm
Luminous efficacy	109lm/W
Optical efficiency	90.78%

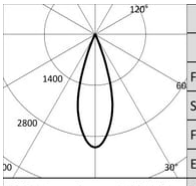

3000K		H(m)	D(m)	Emax(lx)
Ra90			33°	
Fixture Power	33W	1	0.59	12307
Source Flux	3976lm	2	1.19	3077
Fixture Flux	3609lm	3	1.78	1367
Efficacy	109lm/W	4	2.37	769
Imax	12307cd	5	2.96	492

TS1696 Imax=3095cd/klm

TARGETTI

CCIAA Firenze
Share Capital: € 500.000,00
VAT N. (IT): 01537660480
R.E.A: FI-275656

Targetti Sankey S.r.l.
Via Giuseppe Garibaldi, 82
50041 Calenzano (FI)
Italy

Tel: +39 055 37911
targetti.com
targetti@targetti.com

Due to the technological evolution of the electronic components, the data provided may be updated, and as such, confirmation must be requested during the order process.
Luminous flux and power supply have +/-10% tolerances with respect to the indicated value. tq +25°C (CIE 121).

We reserve the right to make technical changes.