RECESSED LUMINAIRES

CCTEvo Wall Washer 78

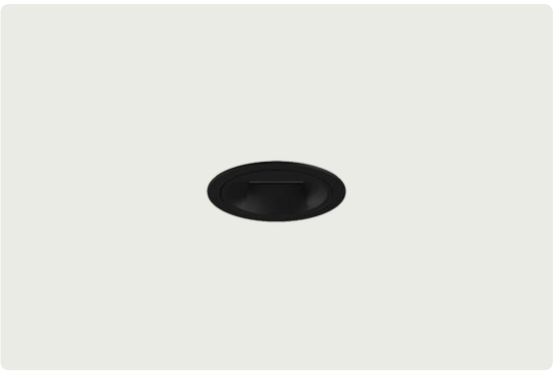

Code
1T8563DA

LIGHT COLOUR	LIGHT DISTRIBUTION	OUTPUT
3000K 90	Wall Washer	13.4W 972lm

POWER SUPPLY CONTROL	COLOUR
220-240Vac DALI	

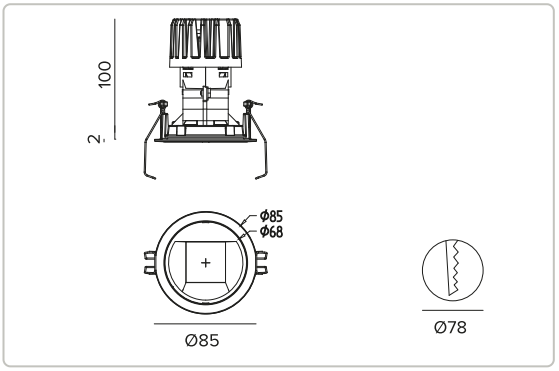

The figures on the drawing are expressed in mm.



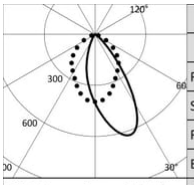

3000K		H(m)	D1(m)	D2(m)	Emax(lx)
Ra90			42°	73°	
Fixture Power	13W	1	0.83	1.56	876
Source Flux	1606lm	2	1.65	3.11	219
Fixture Flux	972lm	3	2.48	4.67	97
Efficacy	73lm/W	4	3.31	6.23	55
Imax	1003cd	5	4.13	7.78	35

Technical Data

Concept

Recessed LED Downlight in a trim version.

Source

High efficiency Chip on Board LED Ra90. Ra80 on request.	
Energy efficiency class	D
Nominal power	12W
Nominal flux	1606lm
Colour rendering index	90
Rf	92
Rg	101
CCT nominal	3000K
Lifetime (L80/B10)	72000h tq +25°C
Lifetime (L90/B10)	72000h tq +25°C

TARGETTI

CCIAA Firenze
Share Capital: € 500.000,00
VAT N. (IT): 01537660480
R.E.A: FI-275656

Targetti Sankey S.r.l.
Via Giuseppe Garibaldi, 82
50041 Calenzano (FI)
Italy

Tel: +39 055 37911
targetti.com
targetti@targetti.com

Due to the technological evolution of the electronic components, the data provided may be updated, and as such, confirmation must be requested during the order process.
Luminous flux and power supply have +/-10% tolerances with respect to the indicated value. tq +25°C (CIE 121).

We reserve the right to make technical changes.

Technical Data

Illuminotechnical characteristics

WW Optic: a highly reflective pre-anodised aluminium asymmetric reflector, a holographic acrylic diffuser screen and thermoplastic load-bearing elements.

Optic	Wall Washer
Optical efficiency	60.55%
Fixture flux	972lm
Luminous efficacy	73lm/W
Photobiological safety	Compliant with RG1 low risk group

Mechanical characteristics

Die-cast black painted anodised aluminium heat sink. Black thermoplastic material structure and a black painted cut-off front. Silicone sealing kit for water and dust protection. Trim version with an integrated black painted die-cast aluminium ring.

Colour and finish	Deep black
Dimensions	ØxH 85x102mm
Weight	0.35Kg
Version	Trim
Degree of protection	IP20 for recessed part
Degree of protection	IP54 for exposed part

Electrical characteristics

Integrated DALI driver. Luminaire compliant with EN 60598-2-22 for power supply from a centralised emergency system CPSS (Central Power Supply System), not incorporated in the luminaire - high risk areas excluded. The default power and flux are 100% in AC and 100% in DC.

Fixture Power	13.4W
Power supply	220-240Vac 50/60Hz
Insulation Class	CLASS 2
Type of driver / Control	DALI - PUSH
Driver included	YES
SAFE FLICKER	PstLM=<1 and SVM=<0.4 (IEC TR 61547-1 and IEC TR 63158), to ensure a more comfortable and safe light
Ambient temperature	0°C / +25°C

Installation

Quick tool-free mounting system for false ceiling installation from 0.5 to 30mm.

Notes

Casambi control system available using a dedicated accessory. 110-277Vac version available on request. Commissioning of the control system via free APP; the intervention of a specialist technician can be quoted on request.

Regulations and Certifications

CE

Warranty

5 years.

Technical Data

Warning

Luminaire designed for disposal/recycling at end-of-life. Replaceable (LED only) light source by a professional. Replaceable control gear by a professional.

TARGETTI

CCIAA Firenze
Share Capital: € 500.000,00
VAT N. (IT): 01537660480
R.E.A: FI-275656

Targetti Sankey S.r.l.
Via Giuseppe Garibaldi, 82
50041 Calenzano (FI)
Italy

Tel: +39 055 37911
targetti.com
targetti@targetti.com

Due to the technological evolution of the electronic components, the data provided may be updated, and as such, confirmation must be requested during the order process.
Luminous flux and power supply have +/-10% tolerances with respect to the indicated value. tq +25°C (CIE 121).

We reserve the right to make technical changes.

Accessories

Mounting System



CODE	L
1T9606	2500mm

Anti-fall safety cable to secure the body of the appliance to the building structure.

Control systems



CODE

1T5349

IP20 wireless control unit with DALI interface.
It generates a local DALI2 bus, enhabling a direct connection to a DALI interface LED driver.
The module can only be used in a closed system and cannot be connected to an existing DALI network.
The module is wireless controlled using a Casambi app for smartphones and tablets using Bluetooth 5.0 technology.
The devices automatically create an adaptive, robust, and reliable wireless mesh network, allowing for the easy and efficient management of a high number of fixtures.
The control unit is preset to the DALI 1CH profile, maning the device can control a single DALI driver with broadcast commands.
In addition to the DALI broadcast, other operating modes are available, such as:

- Button (normally open)
- Control unit 0/1-10V
- Control unit DALI Tunable White DT8
- Presence sensor

If different from the preset mode, the desired operating profile must be set directly by the user before coupling the control unit to the Casambi network.
LxHxP=102x25x36mm.



CODE

2T0131

IP20 Extender for wireless control of LED driver with dimming DALI (or 1-10V) interface based on Casambi technology.
It has a DALI2 output with the capacity to control up to 40 lighting fixtures.
With the addition of a further external BUS DALI power supply it is possible to control up to 64 fixtures.
IP20 Extender is preset to the DALI broadcast profile, meaning all the luminaires connected to it are dimmable at the same level.
In addition to the DALI broadcast other operating modes are available, such as:

- EXTENDER DALI 8CH
- EXTENDER DALI Tunable White
- EXTENDER 0/1-10V
- EXTENDER DALI 4CH
- EXTENDER DALI DT8 Tunable White

If different from the preset mode, the desired operating profile must be set directly by the user before coupling the extender to the Casambi network.
LxHxP=130x22x30mm.

Due to the technological evolution of the electronic components, the data provided may be updated, and as such, confirmation must be requested during the order process.
Luminous flux and power supply have +/-10% tolerances with respect to the indicated value. tq +25°C (CIE 121).

We reserve the right to make technical changes.