RECESSED LUMINAIRES

Oz Stand Alone Trimless - Large 5x - 253x53mm

Code
1T7876EL

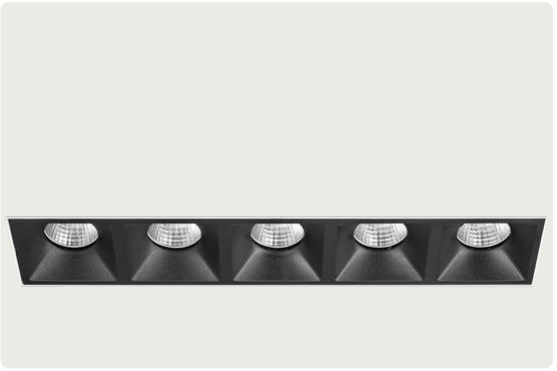

LIGHT COLOUR	LIGHT DISTRIBUTION	OUTPUT
3500K 90	MWFL 50°	32.9W 3505lm

POWER SUPPLY CONTROL

220-240Vac
ON-OFF

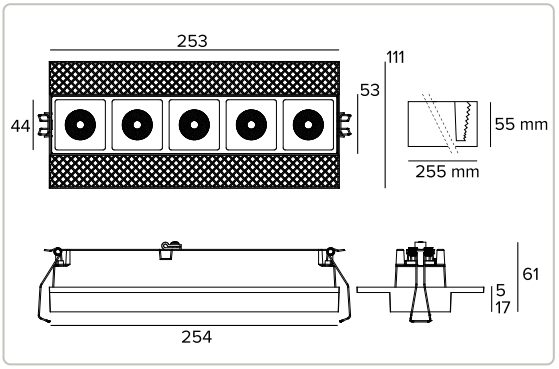

The figures on the drawing are expressed in mm.



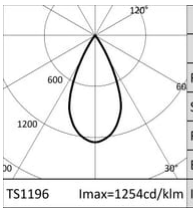

3500K		H(m)	D(m)	Emax(lx)
Ra90			50°	
Fixture Power	33W	1	0.93	5682
Source Flux	4530lm	2	1.85	1420
Fixture Flux	3505lm	3	2.78	631
Efficacy	107lm/W	4	3.71	355
TS1196 Imax=1254cd/klm	Imax 5682cd	5	4.64	227

Technical Data

Concept

Recessed trimless LED floodlights.

Source

High efficiency Chip on Board LED Ra90.	
Energy efficiency class	E
Nominal power	29W
Nominal flux	4530lm
Colour rendering index	90
Rf	91
Rg	100
CCT nominal	3500K
SDCM	2
Lifetime (L80/B10)	72000h tq +25°C
Lifetime (L90/B10)	72000h tq +25°C

TARGETTI

CCIAA Firenze
Share Capital: € 500.000,00
VAT N. (IT): 01537660480
R.E.A: FI-275656

Targetti Sankey S.r.l.
Via Giuseppe Garibaldi, 82
50041 Calenzano (FI)
Italy

Tel: +39 055 37911
targetti.com
targetti@targetti.com

Due to the technological evolution of the electronic components, the data provided may be updated, and as such, confirmation must be requested during the order process.
Luminous flux and power supply have +/-10% tolerances with respect to the indicated value. tq +25°C (CIE 121).

We reserve the right to make technical changes.

Technical Data

Illuminotechnical characteristics

MWFL optic. Anodised aluminium reflector and black polycarbonate frame. The light is suitable for installation in work environments UGR<17 (EN12464-1).

Optic	MWFL
Beam angles	MWFL
Optical efficiency	77.37%
Fixture flux	3505lm
Luminous efficacy	107lm/W
Photobiological safety	Compliant with RG1 low risk group

Mechanical characteristics

Black die-cast anodised aluminium frame. 5X Large version.

Dimensions	AxBxH 253x53x61mm
Weight	0.9Kg
Version	5X
Degree of protection	IP20

Electrical characteristics

Complete with an electronic ON-OFF driver. Luminaire compliant with EN 60598-2-22 for power supply from a centralised emergency system CPSS (Central Power Supply System), not incorporated in the luminaire - high risk areas excluded. The default power and flux are 100% in AC and 100% in DC.

Fixture Power	32.9W
Power supply	220-240Vac 50/60Hz
Insulation Class	CLASS 2
Type of driver / Control	ON-OFF
Driver included	YES
SAFE FLICKER	PstLM=<1 and SVM=<0.4 (IEC TR 61547-1 and IEC TR 63158), to ensure a more comfortable and safe light
Ambient temperature	0°C / +25°C

Installation

Trimless installation system suitable for plasterboard panels, 13, 15, and 17mm.

Notes

110-277Vac version available on request.

Regulations and Certifications

CE

Warranty

5 years.

Warning

Luminaire designed for disposal/recycling at end-of-life. Replaceable (LED only) light source by a professional. Replaceable control gear by a professional.

TARGETTI

CCIAA Firenze
Share Capital: € 500.000,00
VAT N. (IT): 01537660480
R.E.A: FI-275656

Targetti Sankey S.r.l.
Via Giuseppe Garibaldi, 82
50041 Calenzano (FI)
Italy

Tel: +39 055 37911
targetti.com
targetti@targetti.com

Due to the technological evolution of the electronic components, the data provided may be updated, and as such, confirmation must be requested during the order process.
Luminous flux and power supply have +/-10% tolerances with respect to the indicated value. tq +25°C (CIE 121).

We reserve the right to make technical changes.

Accessories

Emergency Kit



CODE

A059

Emergency kit composed of an inverter a LIFePO4 battery and a LED Green indicator.
Allows permanent EP emergency use of the fixture it is connected to.
The 1h or 3h autonomy can be selected by configuring the fixture.
The batteries take 12h to completely recharge.
LED Green indicator wired to the inverter through single-core cables L= 800mm.
Emergency kit for fixtures that comply with EN 60598-2-22 standard, high risk areas excluded.
Battery size 160x54x30 mm.
Inverter size 165x40x25 mm.

TARGETTI

CCIAA Firenze
Share Capital: € 500.000,00
VAT N. (IT): 01537660480
R.E.A: FI-275656

Targetti Sankey S.r.l.
Via Giuseppe Garibaldi, 82
50041 Calenzano (FI)
Italy

Tel: +39 055 37911
targetti.com
targetti@targetti.com

Due to the technological evolution of the electronic components, the data provided may be updated, and as such, confirmation must be requested during the order process.
Luminous flux and power supply have +/-10% tolerances with respect to the indicated value. tq +25°C (CIE 121).

We reserve the right to make technical changes.