PROJECTORS

Jedi Nova 55 Projector Comfort 600

Code

E0532GRH840ELFW

LIGHT COLOUR	LIGHT DISTRIBUTION	OUTPUT
4000K 80	Grazing 17° / 74°	22.9W 2294lm

POWER SUPPLY CONTROL	COLOUR
220-240Vac ON-OFF	

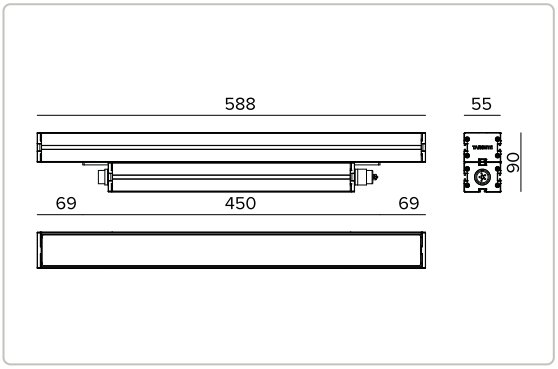

The figures on the drawing are expressed in mm.

3.2 IP66 IP67 IP68 IK07

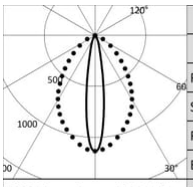

4000K		H(m)	D1(m)	D2(m)	Emax(lx)
Ra80			17°	74°	
Fixture Power	23W	1	0.30	1.51	4346
Source Flux	3836lm	2	0.61	3.01	1086
Fixture Flux	2294lm	3	0.91	4.52	483
Efficacy	100lm/W	4	1.21	6.02	272
TS2081 Imax=1133cd/klm	Imax 4346cd	5	1.52	7.53	174

Technical Data

Concept

Adjustable linear LED projector.

Source

Mid Power High Efficiency Ra80 linear LED board.

Energy efficiency class	B
Nominal power	20.6
Nominal flux	3836lm
Colour rendering index	80
CCT nominal	4000K
Lifetime (L80/B10)	100000h tq +25°C
Lifetime (L90/B10)	59000h tq +25°C

TARGETTI

CCIAA Firenze
Share Capital: € 500.000,00
VAT N. (IT): 01537660480
R.E.A: FI-275656

Targetti Sankey S.r.l.
Via Giuseppe Garibaldi, 82
50041 Calenzano (FI)
Italy

Tel: +39 055 37911
targetti.com
targetti@targetti.com

Due to the technological evolution of the electronic components, the data provided may be updated, and as such, confirmation must be requested during the order process.
Luminous flux and power supply have +/-10% tolerances with respect to the indicated value. tq +25°C (CIE 121).

We reserve the right to make technical changes.

Technical Data

Illuminotechnical characteristics

Internal optical system made of a primary cylindrical lens in PMMA, a high reflectance anodised aluminium reflector and a holographic filter. Comfort version with integrated optical accessory: longitudinal anti-glare screen in black painted steel.

Optic	Grazing
Beam angles	GRZ 20°x75°
Optical efficiency	59.8%
Fixture flux	2294lm
Luminous efficacy	100lm/W
Photobiological safety	Compliant with RG1 low risk group

Mechanical characteristics

Extruded anodised aluminium 15µ body. Extra clear 5mm thick glass flat screen. The body of the fixture is adjustable and can be installed away from the mounting surface using accessory snap brackets.

Colour and finish	Florentine white
Dimensions	AxBxH 588x55x90mm
Weight	3.2Kg
Version	Comfort
Degree of protection	IP66,IP67,IP68
Mechanical Resistance	IK07

Electrical characteristics

Integrated driver, available in the ON-OFF version (positioned below the optical body). Supplied with through-wiring withlongitudinal sealing IN/OUT panel connectors (the sealing limits the risk of humidity raising towards the driver/optical body). Luminaire compliant with EN 60598-2-22 for power supply from a centralised emergency system CPSS (Central Power Supply System), not incorporated in the luminaire - high risk areas excluded. The default power and flux are 100% in AC and 100% in DC.

Fixture Power	22.9W
Power supply	220-240Vac 50/60Hz
Insulation Class	CLASS 1
Type of driver / Control	ON-OFF - PUSH
Driver included	YES
SAFE FLICKER	PstLM=<1 and SVM=<0.4 (IEC TR 61547-1 and IEC TR 63158), to ensure a more comfortable and safe light
Ambient temperature	-25°C / +35°C

Installation

To be completed with powder coated stainless steel fixed or adjustable brackets (available in different lengths).

Notes

110-277Vac version available on request.

Warranty

5 years.

Technical Data

Warning

Luminaire designed for disposal/recycling at end-of-life. Replaceable (LED only) light source by a professional. Replaceable control gear by a professional.

TARGETTI

CCIAA Firenze
Share Capital: € 500.000,00
VAT N. (IT): 01537660480
R.E.A: FI-275656

Targetti Sankey S.r.l.
Via Giuseppe Garibaldi, 82
50041 Calenzano (FI)
Italy

Tel: +39 055 37911
targetti.com
targetti@targetti.com

Due to the technological evolution of the electronic components, the data provided may be updated, and as such, confirmation must be requested during the order process.
Luminous flux and power supply have +/-10% tolerances with respect to the indicated value. tq +25°C (CIE 121).

We reserve the right to make technical changes.

Related codes

Bracket

CODE	COLOUR
A108BT	●

Fixed bracket kit in powder-coatedstainless steel for surface installation (2 pieces).

CODE	COLOUR	VERSION	L
A109FW	○	Short	57mm

Adjustable bracket kit in powder-coated stainless steel for surface installation (2 pieces).
Rotation +/-90°.

CODE	COLOUR	VERSION	L
A110FW	○	Medium	157mm

Adjustable bracket kit in powder-coated stainless steel for surface installation (2 pieces).
Rotation +/-90°.

CODE	COLOUR	VERSION	L
A111ZFW	○	Long	303mm
A111YFW	○	Long	453mm
A111XFW	○	Long	603mm

Adjustable bracket kit in powder-coated stainless steel for surface installation (2 pieces).
Rotation +/-90°.

Mounting System

CODE	COLOUR	H
A112	●	181mm

Earthspike.
Powder coated stainless steel.
To be used with A108, A109, A110.

Accessories

Connector

CODE
A117

IP66/IP68 female connector.
5 pôles (STANDARD 3G2,5mm² MAX, DALI 5G1,5mm² MAX).
Cable diameter range from 7 to 12mm.

TARGETTI

CCIAA Firenze
Share Capital: € 500.000,00
VAT N. (IT): 01537660480
R.E.A: FI-275656

Targetti Sankey S.r.l.
Via Giuseppe Garibaldi, 82
50041 Calenzano (FI)
Italy

Tel: +39 055 37911
targetti.com
targetti@targetti.com

Due to the technological evolution of the electronic components, the data provided may be updated, and as such, confirmation must be requested during the order process.
Luminous flux and power supply have +/-10% tolerances with respect to the indicated value. tq +25°C (CIE 121).

We reserve the right to make technical changes.

CODE
A118

Male/female IP66/IP68 connector kit.
5 pôles (STANDARD 3G2,5mm² MAX, DALI 5G1,5mm² MAX).
Cable diameter range from 7 to 12mm.

CODE
A119

Multiple connection box IP68.
1 IN - 2 OUT 5 poles (STANDARD 3G2,5mm² MAX, DALI 5G1,5mm² MAX).
Cable diameter range from 7 to 12mm.

Cable

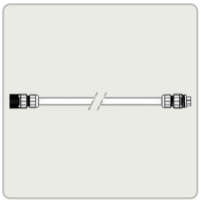

CODE	L
A120Z	1000mm
A120Y	2000mm
A120X	3000mm

Connection cable.
Complete with 5 pole connectors.
For the ON-OFF and DALI version.

Ray Shade

CODE	COLOUR	L
A148XFW		588mm

Paraluce estetico e antiabbagliamento in alluminio verniciato.
Versione per proiettore standard e side box.

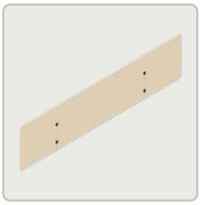

CODE	COLOUR	L
A156XFW		588mm

Paraluce estetico e antiabbagliamento in alluminio verniciato.
Versione per proiettore standard.

TARGETTI

CCIAA Firenze
Share Capital: € 500.000,00
VAT N. (IT): 01537660480
R.E.A: FI-275656

Targetti Sankey S.r.l.
Via Giuseppe Garibaldi, 82
50041 Calenzano (FI)
Italy

Tel: +39 055 37911
targetti.com
targetti@targetti.com

Due to the technological evolution of the electronic components, the data provided may be updated, and as such, confirmation must be requested during the order process.
Luminous flux and power supply have +/-10% tolerances with respect to the indicated value. tq +25°C (CIE 121).

We reserve the right to make technical changes.