PROJECTORS

Dart Small Remote driver



Code
1E3920

LIGHT COLOUR	LIGHT DISTRIBUTION	OUTPUT
3000K 80	MWFL 46°	13.6W 1691lm

POWER SUPPLY CONTROL	COLOUR
400mA	

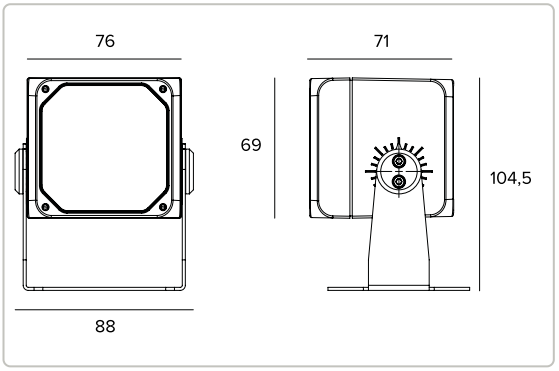

The figures on the drawing are expressed in mm.



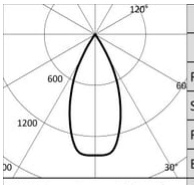

3000K		H(m)	D(m)	Emax(lx)
Ra80			46°	
Fixture Power	14W	1	0.85	3048
Source Flux	2146lm	2	1.70	762
Fixture Flux	1691lm	3	2.54	339
Efficacy	124lm/W	4	3.39	190
Imax	3050cd	5	4.24	122

Technical Data

Concept

Professional adjustable LED projector.

Source

High efficiency Chip on Board LED Ra80.	
Energy efficiency class	D
Nominal power	14W
Nominal flux	2146lm
Colour rendering index	80
Rf	84
Rg	97
CCT nominal	3000K
SDCM	2
Lifetime (L80/B10)	56000h tq +25°C
Lifetime (L90/B10)	56000h tq +25°C

TARGETTI

CCIAA Firenze
Share Capital: € 500.000,00
VAT N. (IT): 01537660480
R.E.A: FI-275656

Targetti Sankey S.r.l.
Via Giuseppe Garibaldi, 82
50041 Calenzano (FI)
Italy

Tel: +39 055 37911
targetti.com
targetti@targetti.com

Due to the technological evolution of the electronic components, the data provided may be updated, and as such, confirmation must be requested during the order process.
Luminous flux and power supply have +/-10% tolerances with respect to the indicated value. tq +25°C (CIE 121).

We reserve the right to make technical changes.

Technical Data

Illuminotechnical characteristics

Equipped with convex faceted precision optics in high specularity anodised aluminium.

Optic	MWFL
Beam angles	MWFL
Optical efficiency	78.8%
Fixture flux	1691lm
Luminous efficacy	124lm/W
Photobiological safety	Compliant with RG1 low risk group

Mechanical characteristics

Painted die-cast anodised aluminium body and painted stainless steel mounting bracket. ±20° rotation on the horizontal plane and 0-180° on the vertical plane.

Colour and finish	Ferrite
Dimensions	AxBxH 76x69x71mm
Weight	0.72Kg
Degree of protection	IP66
Mechanical Resistance	IK10

Electrical characteristics

Optional feeding system available with ON-OFF, DALI or 1-10V dimmable electronic driver kit. Pre-cabled with a 1.5m H07RN-F cable.

Fixture Power	13.6W
Power supply	400mA
Insulation Class	CLASS 3
Driver included	NO
Ambient temperature	-25°C / +35°C

Installation

Mounting bracket with aiming adjustability.

Notes

Casambi control system available using a dedicated accessory (only with DALI driver). Uses the "Waterblock Smart" technical solution that involves resin coating the connection cables, limiting the risk of humidity reaching the driver or the fixture. It is possible to subject the product to Cataphoresis treatment on request. 110-277Vac version available on request. Values related to the power consumption of the fixture do not take into account the consumption of the accessory driver, which depends on the choice of driver. Commissioning of the control system via free APP; the intervention of a specialist technician can be quoted on request.

Regulations and Certifications

CE

Warranty

5 years.

Warning

Luminaire designed for disposal/recycling at end-of-life. Replaceable (LED only) light source by a professional.

Related codes

Power Supply

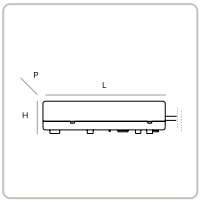

CODE	IP	OUTPUT CURRENT	POWER SUPPLY	POWER	LXHXP
1T4215EL	IP20	400mA	220-240Vac	18W	146x22x43mm
1E3033EL	IP68	400mA	220-240Vac 110-127Vac	20W 15W	115x26x53mm

Electronic ON-OFF power supply.

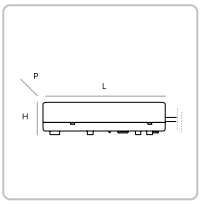

CODE	IP	OUTPUT CURRENT	POWER SUPPLY	POWER	LXHXP
1T4215D	IP20	400mA	220-240Vac 110-127Vac	20W 15W	111x22x52mm
1E3033D	IP68	400mA	110-240Vac	20W	135x31x80mm

1-10V power supply.

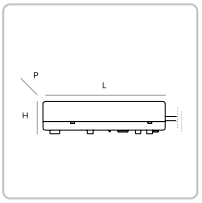

CODE	IP	OUTPUT CURRENT	POWER SUPPLY	POWER	LXHXP
1T4215DA	IP20	400mA	220-240Vac	20W	146x30x44mm
1E3033DA	IP68	400mA	220-240Vac 110-127Vac	20W 15W	115x26x53mm

DALI power supply.

Accessories

Filter



CODE	Ø
1E3012	53mm

Blade of light filter.
PMMA holographic filter for a blade of light effect.
To be completed with a dedicated holder ring.

Grid



CODE	COLOUR
1E3014	

Anti-glare louver.
The central elements may be removed to obtain two different levels of glare control.
Powder coated stainless steel.

TARGETTI

CCIAA Firenze
Share Capital: € 500.000,00
VAT N. (IT): 01537660480
R.E.A: FI-275656

Targetti Sankey S.r.l.
Via Giuseppe Garibaldi, 82
50041 Calenzano (FI)
Italy

Tel: +39 055 37911
targetti.com
targetti@targetti.com

Due to the technological evolution of the electronic components, the data provided may be updated, and as such, confirmation must be requested during the order process.
Luminous flux and power supply have +/-10% tolerances with respect to the indicated value. tq +25°C (CIE 121).

We reserve the right to make technical changes.

Screen

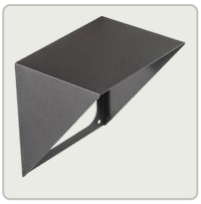

CODE	COLOUR
1E3013	

Asymmetric screen.
Powder coated stainless steel.

Mounting System



CODE	COLOUR
1E3015	

Plate for fixture rotation.
Powder coated stainless steel.



CODE	COLOUR	ØXH
1E3016		70x182mm

Earthspike.
Powder coated stainless steel.

Holder Ring



CODE	COLOUR	L
1E3011		66mm

Holder ring.
Powder coated stainless steel.

Connector



CODE
1E2493

Linear connection box IP68.
4 poles max. wire section 2.5mm².
Cable diameter range from 7 to 12mm.

TARGETTI

CCIAA Firenze
Share Capital: € 500.000,00
VAT N. (IT): 01537660480
R.E.A: FI-275656

Targetti Sankey S.r.l.
Via Giuseppe Garibaldi, 82
50041 Calenzano (FI)
Italy

Tel: +39 055 37911
targetti.com
targetti@targetti.com

Due to the technological evolution of the electronic components, the data provided may be updated, and as such, confirmation must be requested during the order process.
Luminous flux and power supply have +/-10% tolerances with respect to the indicated value. tq +25°C (CIE 121).

We reserve the right to make technical changes.

Control systems



CODE

1E3048

IP67 wireless control unit with DALI interface.
It generates a local DALI2 bus, enhabling a direct connection to a DALI interface LED driver.
The module can only be used in a closed system and cannot be connected to an existing DALI network.
The module is wireless controlled using a Casambi app for smartphones and tablets using Bluetooth 5.0 technology.
The devices automatically create an adaptive, robust, and reliable wireless mesh network, allowing for the easy and efficient management of a high number of fixtures.
The control unit is preset to the DALI 1CH profile, maning the device can control a single DALI driver with broadcast commands.
In addition to the DALI broadcast, other operating modes are available, such as:

- Button (normally open)
- Control unit 0/1-10V
- Control unit DALI Tunable White DT8
- Presence sensor

If different from the preset mode, the desired operating profile must be set directly by the user before coupling the control unit to the Casambi network.
LxHxP=108x28x65mm.



CODE

1E4369

IP67 Extender for wireless control of LED driver with dimming DALI interface based on Casambi technology.
It has a DALI2 output with the capacity to control up to 40 lighting fixtures.
With the addition of a further external BUS DALI power supply it is possible to control up to 64 fixtures.
IP67 Extender is preset to the DALI broadcast profile, meaning all the luminaires connected to it are dimmable at the same level.
In addition to the DALI broadcast other operating modes are available, such as:

- EXTENDER DALI 8CH
- EXTENDER DALI Tunable White
- EXTENDER DALI 4CH
- EXTENDER DALI DT8 Tunable White

If different from the preset mode, the desired operating profile must be set directly by the user before coupling the extender to the Casambi network.
LxHxP=148x40x150mm.

Due to the technological evolution of the electronic components, the data provided may be updated, and as such, confirmation must be requested during the order process.
Luminous flux and power supply have +/-10% tolerances with respect to the indicated value. tq +25°C (CIE 121).

We reserve the right to make technical changes.