IN-GROUND LUMINAIRES

Keplero 80 - Asymmetric screen



Code
E022MWL82724CCB

LIGHT COLOUR	LIGHT DISTRIBUTION	OUTPUT
2700K 80	Asymmetrical	7.1W 333lm

POWER SUPPLY CONTROL	COLOUR
24Vdc	

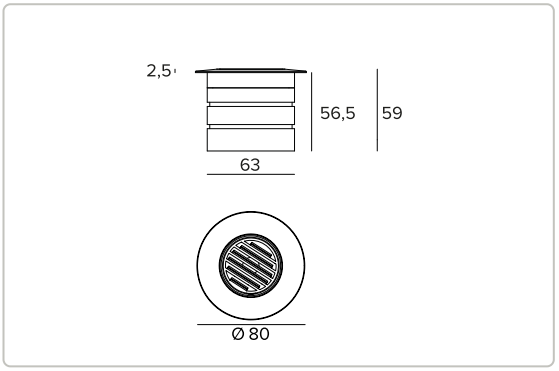

The figures on the drawing are expressed in mm.

0.5 IP66 IP67 IP68 IP69 IK08 0.3M



2700K		H(m)	D(m)	Emax(lx)
Ra80			38°	
Fixture Power	7W	1	0.68	741
Source Flux	971lm	2	1.37	185
Fixture Flux	333lm	3	2.05	82
Efficacy	47lm/W	4	2.73	46
Imax	741cd	5	3.41	30

Technical Data

Concept

Miniaturised recessed LED fixture.

Source

High efficiency Chip on Board LED Ra80.	
Energy efficiency class	D
Nominal power	6,2W
Nominal flux	971lm
Colour rendering index	80
Rf	82
Rg	96
CCT nominal	2700K
Lifetime (L80/B10)	72000h tq +25°C
Lifetime (L90/B10)	72000h tq +25°C

TARGETTI

CCIAA Firenze
Share Capital: € 500.000,00
VAT N. (IT): 01537660480
R.E.A: FI-275656

Targetti Sankey S.r.l.
Via Giuseppe Garibaldi, 82
50041 Calenzano (FI)
Italy

Tel: +39 055 37911
targetti.com
targetti@targetti.com

Due to the technological evolution of the electronic components, the data provided may be updated, and as such, confirmation must be requested during the order process.
Luminous flux and power supply have +/-10% tolerances with respect to the indicated value. tq +25°C (CIE 121).

We reserve the right to make technical changes.

Technical Data

Illuminotechnical characteristics

Precision optic system with PMMA lenses. Light control system integrated into the front for asymmetric emission.

Optic	Asymmetrical
Beam angles	WFL - ASYM
Optical efficiency	34.26%
Fixture flux	333lm
Luminous efficacy	47lm/W
Photobiological safety	Compliant with RG1 low risk group

Mechanical characteristics

Anodised polished aluminium body. Polished stainless steel front ring (copper bronze). Bevelled extra-clear front glass. Passive cooling system.

Colour and finish	Copper bronze
Dimensions	ØxH 80x59mm
Weight	0.5Kg
Version	Asymmetric screen
Degree of protection	IP66,IP67,IP68,IP69
Mechanical Resistance	IK08

Electrical characteristics

Powered by a 230V/24Vdc electronic transformer to be ordered separately. Pre-wired with 300mm of wire. Dimmable with a special accessory kit.

Fixture Power	7.1W
Power supply	24Vdc
Insulation Class	CLASS 3
Driver included	NO
Ambient temperature	-25°C / +35°C

Notes

Casambi control system available using a dedicated accessory (only with DALI dimmer). Uses the "Waterblock Smart" technical solution that involves resin coating the connection cables, limiting the risk of humidity reaching the driver or the fixture. 110-277Vac version available on request. Values related to the power consumption of the fixture do not take into account the consumption of the accessory driver, which depends on the choice of driver. IP68: the projector is not suitable for permanent underwater installation but can withstand temporary accidental immersion to a depth of 2 metres (max.24h). IP69: IEC/EN 60529 standard compliant. Commissioning of the control system via free APP; the intervention of a specialist technician can be quoted on request.

Regulations and Certifications

CE

Warning

Luminaire designed for disposal/recycling at end-of-life. Replaceable (LED only) light source by a professional. Replaceable control gear by a professional.

Due to the technological evolution of the electronic components, the data provided may be updated, and as such, confirmation must be requested during the order process.
Luminous flux and power supply have +/-10% tolerances with respect to the indicated value. tq +25°C (CIE 121).

We reserve the right to make technical changes.

Related codes

Power Supply

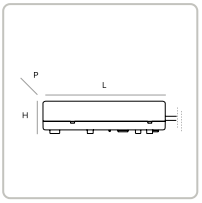

CODE	IP	OUTPUT VOLTAGE	POWER SUPPLY	POWER	LXHXP
1E4359	IP67	24Vdc	220-240Vac	14,4W	79x25x38mm
1T3726	IP20	24Vdc	220-240Vac	50W	185x22x64mm
1T3586	IP67	24Vdc	220-240Vac	75W	140x32x63mm
1T3587	IP67	24Vdc	220-240Vac	100W	230x87x43mm
1T3588	IP67	24Vdc	220-240Vac	200W	238x42x67mm

Electronic ON-OFF power supply.

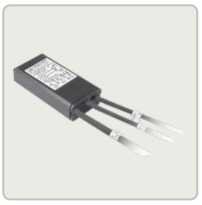

CODE	IP	OUTPUT VOLTAGE	POWER SUPPLY	POWER	LXHXP
1E4397EL	IP68	24Vdc	220-240Vac	17W	122x26x54mm

Electronic ON-OFF power supply.

Sleeve

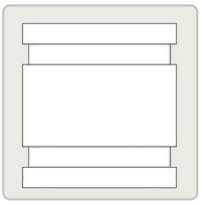

CODE	H	Ø
1E3460	80mm	75mm

Installation sleeve.

Accessories

Connector



CODE

1E2769

Linear connection box IP66/IP68.
5 poles max. wire section 1.5mm².
Cable diameter range from 7 to 12mm.



CODE

1E2494

Multiple connection box IP68.
1 IN - 3 OUT 4 poles max. wire section 2.5mm².
Cable diameter range from 6 to 12mm.

TARGETTI

CCIAA Firenze
Share Capital: € 500.000,00
VAT N. (IT): 01537660480
R.E.A: FI-275656

Targetti Sankey S.r.l.
Via Giuseppe Garibaldi, 82
50041 Calenzano (FI)
Italy

Tel: +39 055 37911
targetti.com
targetti@targetti.com

Due to the technological evolution of the electronic components, the data provided may be updated, and as such, confirmation must be requested during the order process.
Luminous flux and power supply have +/-10% tolerances with respect to the indicated value. tq +25°C (CIE 121).

We reserve the right to make technical changes.

Control systems

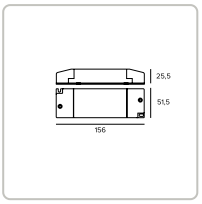

CODE

1T6581

Dimmer for 12-24Vdc constant voltage LED driver.
1-10V/DALI control input.
IP20



CODE

1E3048

IP67 wireless control unit with DALI interface.
It generates a local DALI2 bus, enhabling a direct connection to a DALI interface LED driver.
The module can only be used in a closed system and cannot be connected to an existing DALI network.
The module is wireless controlled using a Casambi app for smartphones and tablets using Bluetooth 5.0 technology.
The devices automatically create an adaptive, robust, and reliable wireless mesh network, allowing for the easy and efficient management of a high number of fixtures.
The control unit is preset to the DALI 1CH profile, maning the device can control a single DALI driver with broadcast commands.
In addition to the DALI broadcast, other operating modes are available, such as:

- Button (normally open)
- Control unit 0/1-10V
- Control unit DALI Tunable White DT8
- Presence sensor

If different from the preset mode, the desired operating profile must be set directly by the user before coupling the control unit to the Casambi network.
LxHxP=108x28x65mm.



CODE

1E4369

IP67 Extender for wireless control of LED driver with dimming DALI interface based on Casambi technology.
It has a DALI2 output with the capacity to control up to 40 lighting fixtures.
With the addition of a further external BUS DALI power supply it is possible to control up to 64 fixtures.
IP67 Extender is preset to the DALI broadcast profile, meaning all the luminaires connected to it are dimmable at the same level.
In addition to the DALI broadcast other operating modes are available, such as:

- EXTENDER DALI 8CH
- EXTENDER DALI Tunable White
- EXTENDER DALI 4CH
- EXTENDER DALI DT8 Tunable White

If different from the preset mode, the desired operating profile must be set directly by the user before coupling the extender to the Casambi network.
LxHxP=148x40x150mm.

TARGETTI

CCIAA Firenze
Share Capital: € 500.000,00
VAT N. (IT): 01537660480
R.E.A: FI-275656

Targetti Sankey S.r.l.
Via Giuseppe Garibaldi, 82
50041 Calenzano (FI)
Italy

Tel: +39 055 37911
targetti.com
targetti@targetti.com

Due to the technological evolution of the electronic components, the data provided may be updated, and as such, confirmation must be requested during the order process.
Luminous flux and power supply have +/-10% tolerances with respect to the indicated value. tq +25°C (CIE 121).

We reserve the right to make technical changes.