IN-GROUND LUMINAIRES

Jedi Compact Outdoor Recessed - Integrated driver - L. 905mm

Code
1E3687DA



LIGHT COLOUR	LIGHT DISTRIBUTION	OUTPUT
3500K 80	Grazing 76° / 15°	40W 4388lm

POWER SUPPLY CONTROL	COLOUR
220-240Vac DALI	

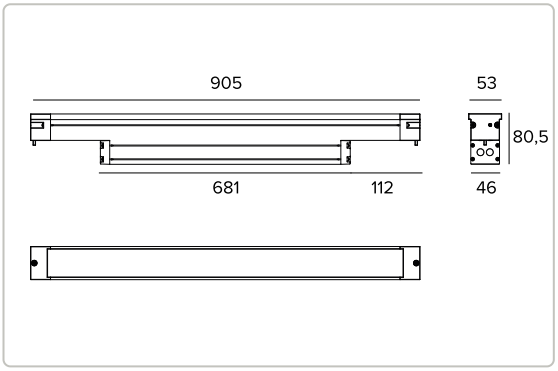

The figures on the drawing are expressed in mm.

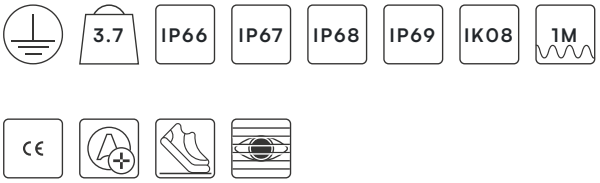

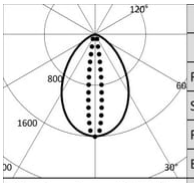

3500K		H(m)	D1(m)	D2(m)	Emax(lx)
Ra80			76°	15°	
Fixture Power	40W	1	1.55	0.26	8451
Source Flux	5280lm	2	3.10	0.51	2113
Fixture Flux	4388lm	3	4.65	0.77	939
Efficacy	110lm/W	4	6.21	1.02	528
Imax	8451cd	5	7.76	1.28	338

Technical Data

Concept

Recessed linear LED projector.

Source

High Power High Efficiency Ra80 linear LED board. Ra90 on request.	
Energy efficiency class	D
Nominal power	36W
Nominal flux	5280lm
Colour rendering index	80
Rf	83.6
Rg	96.5
CCT nominal	3500K
Lifetime (L80/B10)	100000h tq +25°C
Lifetime (L90/B10)	59000h tq +25°C

TARGETTI

CCIAA Firenze
Share Capital: € 500.000,00
VAT N. (IT): 01537660480
R.E.A: FI-275656

Targetti Sankey S.r.l.
Via Giuseppe Garibaldi, 82
50041 Calenzano (FI)
Italy

Tel: +39 055 37911
targetti.com
targetti@targetti.com

Due to the technological evolution of the electronic components, the data provided may be updated, and as such, confirmation must be requested during the order process.
Luminous flux and power supply have +/-10% tolerances with respect to the indicated value. tq +25°C (CIE 121).

We reserve the right to make technical changes.

Technical Data

Illuminotechnical characteristics

Internal optical system composed of a primary cylindrical glass lens, a high reflectance anodised aluminium reflector and an integrated holographic filter. Grazing light version.

Optic	Grazing
Beam angles	GRZ
Optical efficiency	83.1%
Fixture flux	4388lm
Luminous efficacy	110lm/W
Photobiological safety	Compliant with RG1 low risk group

Mechanical characteristics

Extruded anodised aluminium 15µ body. Extra clear 5mm thick glass flat screen.

Colour and finish	Aluminium
Dimensions	AxBxH 905x53x81mm
Weight	3.7Kg
Version	Integrated driver
Degree of protection	IP66,IP67,IP68,IP69
Mechanical Resistance	IK08

Electrical characteristics

Integrated driver version. Complete with a DALI power supply. Pre-cabled with a 1 metre 5x1mm² H07RN-F cable. Casambi control system available using a dedicated accessory. Luminaire compliant with EN 60598-2-22 for power supply from a centralised emergency system CPSS (Central Power Supply System), not incorporated in the luminaire - high risk areas excluded. The default power and flux are 100% in AC and 100% in DC.

Fixture Power	40W
Power supply	220-240Vac 50/60Hz
Insulation Class	CLASS 1
Type of driver / Control	DALI
Driver included	YES
SAFE FLICKER	PstLM=<1 and SVM=<0.4 (IEC TR 61547-1 and IEC TR 63158), to ensure a more comfortable and safe light
Ambient temperature	-25°C / +35°C

Installation

To be completed with an anodised aluminium outer casing suitable for in-line installation and external looping.

Notes

Uses the "Waterblock Smart" technical solution that involves resin coating the connection cables, limiting the risk of humidity reaching the driver or the fixture. 110-277Vac version available on request. IP68: the projector is not suitable for permanent underwater installation but can withstand temporary accidental immersion to a depth of 2 metres (max.24h). IP69: IEC/EN 60529 standard compliant. Commissioning of the control system via free APP; the intervention of a specialist technician can be quoted on request.

Regulations and Certifications

CE

Technical Data

Warranty

5 years.

Warning

Luminaire designed for disposal/recycling at end-of-life. Replaceable (LED only) light source by a professional. Replaceable control gear by a professional.

TARGETTI

CCIAA Firenze
Share Capital: € 500.000,00
VAT N. (IT): 01537660480
R.E.A: FI-275656

Targetti Sankey S.r.l.
Via Giuseppe Garibaldi, 82
50041 Calenzano (FI)
Italy

Tel: +39 055 37911
targetti.com
targetti@targetti.com

Due to the technological evolution of the electronic components, the data provided may be updated, and as such, confirmation must be requested during the order process.
Luminous flux and power supply have +/-10% tolerances with respect to the indicated value. tq +25°C (CIE 121).

We reserve the right to make technical changes.

Related codes

Insertion Box

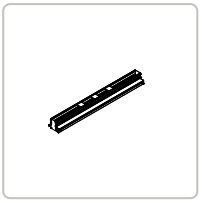

CODE	P	H	L
1E3734	96mm	88mm	909mm

Aluminium outer casing for Jedi Compact with integrated driver.

Accessories

Tool



CODE

1E3305

Tightening wrench for the connector kit.

Connector



CODE

1E2769

Linear connection box IP66/IP68.
5 poles max. wire section 1.5mm².
Cable diameter range from 7 to 12mm.



CODE

1E3184

IP68 4-way cable connector (5 pole).

Control systems



CODE

1E3048

IP67 wireless control unit with DALI interface.
It generates a local DALI2 bus, enhabling a direct connection to a DALI interface LED driver.
The module can only be used in a closed system and cannot be connected to an existing DALI network.
The module is wireless controlled using a Casambi app for smartphones and tablets using Bluetooth 5.0 technology.
The devices automatically create an adaptive, robust, and reliable wireless mesh network, allowing for the easy and efficient management of a high number of fixtures.
The control unit is preset to the DALI 1CH profile, maning the device can control a single DALI driver with broadcast commands.
In addition to the DALI broadcast, other operating modes are available, such as:

- Button (normally open)
- Control unit 0/1-10V
- Control unit DALI Tunable White DT8
- Presence sensor

If different from the preset mode, the desired operating profile must be set directly by the user before coupling the control unit to the Casambi network.
LxHxP=108x28x65mm.

TARGETTI

CCIAA Firenze
Share Capital: € 500.000,00
VAT N. (IT): 01537660480
R.E.A: FI-275656

Targetti Sankey S.r.l.
Via Giuseppe Garibaldi, 82
50041 Calenzano (FI)
Italy

Tel: +39 055 37911
targetti.com
targetti@targetti.com

Due to the technological evolution of the electronic components, the data provided may be updated, and as such, confirmation must be requested during the order process.
Luminous flux and power supply have +/-10% tolerances with respect to the indicated value. tq +25°C (CIE 121).

We reserve the right to make technical changes.



CODE

1E4369

IP67 Extender for wireless control of LED driver with dimming DALI interface based on Casambi technology.
It has a DALI2 output with the capacity to control up to 40 lighting fixtures.
With the addition of a further external BUS DALI power supply it is possible to control up to 64 fixtures.
IP67 Extender is preset to the DALI broadcast profile, meaning all the luminaires connected to it are dimmable at the same level.
In addition to the DALI broadcast other operating modes are available, such as:

- EXTENDER DALI 8CH
- EXTENDER DALI Tunable White
- EXTENDER DALI 4CH
- EXTENDER DALI DT8 Tunable White

If different from the preset mode, the desired operating profile must be set directly by the user before coupling the extender to the Casambi network.
LxHxP=148x40x150mm.

Surge protector

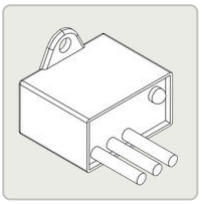

CODE

A013A

Surge protector compatible with CLASS I lighting fixtures.
Operating voltage 230-277Vac.
SPD type 2+3.
Max surge protection 10kV.
CLASS I
IP67



CODE

A013C

Surge protector compatible with CLASS I lighting fixtures.
DALI, DMX, 0-10V datalines compliance.
Operating voltage 230Vac.
SPD type 2+3.
Max surge protection 10kV.
CLASS I
IP20

TARGETTI

CCIAA Firenze
Share Capital: € 500.000,00
VAT N. (IT): 01537660480
R.E.A: FI-275656

Targetti Sankey S.r.l.
Via Giuseppe Garibaldi, 82
50041 Calenzano (FI)
Italy

Tel: +39 055 37911
targetti.com
targetti@targetti.com

Due to the technological evolution of the electronic components, the data provided may be updated, and as such, confirmation must be requested during the order process.
Luminous flux and power supply have +/-10% tolerances with respect to the indicated value. tq +25°C (CIE 121).

We reserve the right to make technical changes.