IN-GROUND LUMINAIRES

# Jedi Compact Outdoor Recessed Louvre - Integrated driver - L. 905mm

**Code**
**1E3695EL**



| LIGHT COLOUR | LIGHT DISTRIBUTION | OUTPUT |
|---|---|---|
| 3500K<br>80 | FL<br>29° | 40W<br>2307lm |

| POWER SUPPLY CONTROL | COLOUR |
|---|---|
| 220-240Vac<br>ON-OFF | |

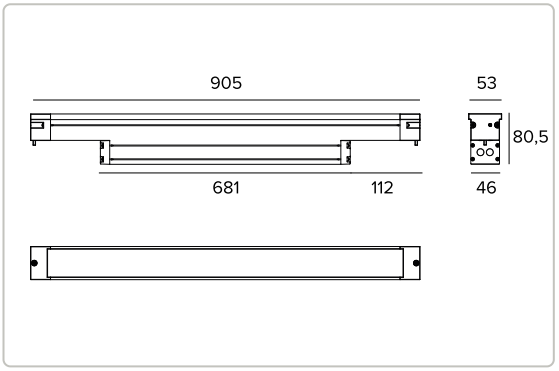


**The figures on the drawing are expressed in mm.**

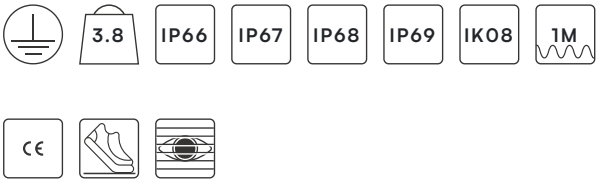





| 3500K | | H(m) | D1(m) | D2(m) | Emax(lx) |
|---|---|---|---|---|---|
| Ra80 | | | 86° | 29° | |
| Fixture Power | 40W | 1 | 1.86 | 0.52 | 2681 |
| Source Flux | 5280lm | 2 | 3.71 | 1.05 | 670 |
| Fixture Flux | 2307lm | 3 | 5.57 | 1.57 | 298 |
| Efficacy | 58lm/W | 4 | 7.42 | 2.09 | 168 |
| Imax | 2681cd | 5 | 9.28 | 2.62 | 107 |

## Technical Data

### Concept

Recessed linear LED projector.

### Source

| | |
|---|---|
| High Power High Efficiency Ra80 linear LED board. Ra90 on request. | |
| Energy efficiency class | D |
| Nominal power | 36W |
| Nominal flux | 5280lm |
| Colour rendering index | 80 |
| Rf | 83.6 |
| Rg | 96.5 |
| CCT nominal | 3500K |
| Lifetime (L80/B10) | 100000h tq +25°C |
| Lifetime (L90/B10) | 59000h tq +25°C |

TARGETTI

CCIAA Firenze
Share Capital: € 500.000,00
VAT N. (IT): 01537660480
R.E.A: FI-275656

Targetti Sankey S.r.l.
Via Giuseppe Garibaldi, 82
50041 Calenzano (FI)
Italy

Tel: +39 055 37911
targetti.com
targetti@targetti.com

Due to the technological evolution of the electronic components, the data provided may be updated, and as such, confirmation must be requested during the order process.
Luminous flux and power supply have +/-10% tolerances with respect to the indicated value. tq +25°C (CIE 121).

We reserve the right to make technical changes.

## Technical Data

### Illuminotechnical characteristics

Internal optical system composed of a primary cylindrical glass lens, a high reflectance anodised aluminium reflector and an integrated holographic filter. Flood version.

| | |
|---|---|
| Optic | FL |
| Beam angles | FL |
| Optical efficiency | 43.7% |
| Fixture flux | 2307lm |
| Luminous efficacy | 58lm/W |
| Photobiological safety | Compliant with RG1 low risk group |

### Mechanical characteristics

Extruded anodised aluminium 15µ body. Extra clear 5mm thick glass flat screen.

| | |
|---|---|
| Colour and finish | Aluminium |
| Dimensions | AxBxH 905x53x81mm |
| Weight | 3.8Kg |
| Version | Louvre - Integrated driver |
| Degree of protection | IP66,IP67,IP68,IP69 |
| Mechanical Resistance | IK08 |

### Electrical characteristics

Integrated driver version. Complete with electronic ON-OFF power supply. Version with an integrated Louver effect grid. Pre-cabled with a 1 metre 3x1mm² H07RN-F cable. Luminaire compliant with EN 60598-2-22 for power supply from a centralised emergency system CPSS (Central Power Supply System), not incorporated in the luminaire - high risk areas excluded. The default power and flux are 100% in AC and 100% in DC.

| | |
|---|---|
| Fixture Power | 40W |
| Power supply | 220-240Vac 50/60Hz |
| Insulation Class | CLASS 1 |
| Type of driver / Control | ON-OFF |
| Driver included | YES |
| SAFE FLICKER | PstLM=<1 and SVM=<0.4 (IEC TR 61547-1 and IEC TR 63158), to ensure a more comfortable and safe light |
| Ambient temperature | -25°C / +35°C |

### Installation

To be completed with an anodised aluminium outer casing suitable for in-line installation and external looping.

### Notes

Uses the "Waterblock Smart" technical solution that involves resin coating the connection cables, limiting the risk of humidity reaching the driver or the fixture. 110-277Vac version available on request. IP68: the projector is not suitable for permanent underwater installation but can withstand temporary accidental immersion to a depth of 2 metres (max.24h). IP69: IEC/EN 60529 standard compliant.

### Regulations and Certifications

CE

## Technical Data

### Warranty

5 years.

### Warning

Luminaire designed for disposal/recycling at end-of-life. Replaceable (LED only) light source by a professional. Replaceable control gear by a professional.

TARGETTI

CCIAA Firenze
Share Capital: € 500.000,00
VAT N. (IT): 01537660480
R.E.A: FI-275656

Targetti Sankey S.r.l.
Via Giuseppe Garibaldi, 82
50041 Calenzano (FI)
Italy

Tel: +39 055 37911
targetti.com
targetti@targetti.com

Due to the technological evolution of the electronic components, the data provided may be updated, and as such, confirmation must be requested during the order process.
Luminous flux and power supply have +/-10% tolerances with respect to the indicated value. tq +25°C (CIE 121).

We reserve the right to make technical changes.

## Related codes

### Insertion Box

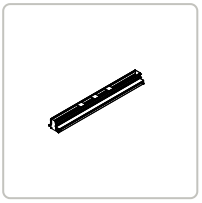

| CODE | P | H | L |
|---|---|---|---|
| 1E3734 | 96mm | 88mm | 909mm |

Aluminium outer casing for Jedi Compact with integrated driver.

## Accessories

### Tool



CODE

1E3305

Tightening wrench for the connector kit.

### Connector



CODE

1E2769

Linear connection box IP66/IP68.
5 poles max. wire section 1.5mm².
Cable diameter range from 7 to 12mm.



CODE

1E2494

Multiple connection box IP68.
1 IN - 3 OUT 4 poles max. wire section 2.5mm².
Cable diameter range from 6 to 12mm.

### Surge protector

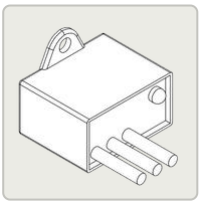

CODE

A013A

Surge protector compatible with CLASS I lighting fixtures.
Operating voltage 230-277Vac.
SPD type 2+3.
Max surge protection 10kV.
CLASS I
IP67

TARGETTI

CCIAA Firenze
Share Capital: € 500.000,00
VAT N. (IT): 01537660480
R.E.A: FI-275656

Targetti Sankey S.r.l.
Via Giuseppe Garibaldi, 82
50041 Calenzano (FI)
Italy

Tel: +39 055 37911
targetti.com
targetti@targetti.com

Due to the technological evolution of the electronic components, the data provided may be updated, and as such, confirmation must be requested during the order process.
Luminous flux and power supply have +/-10% tolerances with respect to the indicated value. tq +25°C (CIE 121).

We reserve the right to make technical changes.