RECESSED LUMINAIRES

CCTEvo Extractable 162



Code
1T9108EL

LIGHT COLOUR	LIGHT DISTRIBUTION	OUTPUT
3500K 90	FL 27°	54.9W 4752lm

POWER SUPPLY CONTROL	COLOUR
220-240Vac ON-OFF	

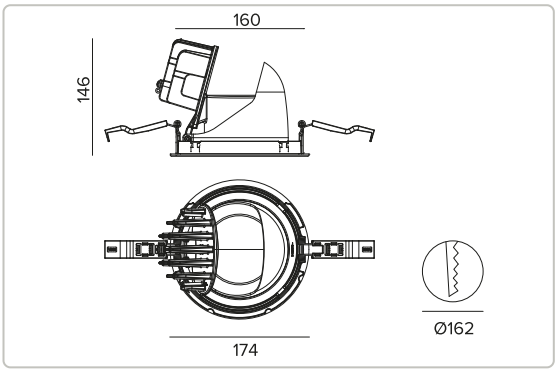

The figures on the drawing are expressed in mm.





3500K		H(m)	D(m)	Emax(lx)
Ra90			27°	
Fixture Power	55W	1	0.47	17277
Source Flux	6684lm	2	0.94	4319
Fixture Flux	4752lm	3	1.42	1920
Efficacy	87lm/W	4	1.89	1080
Imax	17277cd	5	2.36	691

Technical Data

Concept

Recessed extractable LED projector.

Source

High efficiency Chip on Board LED Ra90. Ra80 on request.	
Energy efficiency class	E
Nominal power	49W
Nominal flux	6684lm
Colour rendering index	90
Rf	91
Rg	100
CCT nominal	3500K
Lifetime (L80/B10)	72000h tq +25°C
Lifetime (L90/B10)	72000h tq +25°C

TARGETTI

CCIAA Firenze
Share Capital: € 500.000,00
VAT N. (IT): 01537660480
R.E.A: FI-275656

Targetti Sankey S.r.l.
Via Giuseppe Garibaldi, 82
50041 Calenzano (FI)
Italy

Tel: +39 055 37911
targetti.com
targetti@targetti.com

Due to the technological evolution of the electronic components, the data provided may be updated, and as such, confirmation must be requested during the order process.
Luminous flux and power supply have +/-10% tolerances with respect to the indicated value. tq +25°C (CIE 121).

We reserve the right to make technical changes.

Technical Data

Illuminotechnical characteristics

FL - precision optics with a black silicone cut off ring. Convex faceted highly reflective anodised aluminium reflector and a holographic diffusion filter. UGR<19 (EN 12464-1).

Optic	FL
Beam angles	FL (27°)
Optical efficiency	71.09%
Fixture flux	4752lm
Luminous efficacy	87lm/W
Photobiological safety	Compliant with RG1 low risk group

Mechanical characteristics

Die-cast white painted anodised aluminium body and dissipator. Friction rotation system on hinges with adjustability of the fixture from -25°/+75° on a vertical plane and can be manually aimed to 355° on a horizontal plane. Trim version with an integrated white ring.

Colour and finish	Plaster white
Dimensions	ØxH 174x146mm
Weight	1.15Kg
Degree of protection	IP20

Electrical characteristics

Integrated electronic ON-OFF driver.	
Fixture Power	54.9W
Power supply	220-240Vac 50/60Hz
Insulation Class	CLASS 2
Type of driver / Control	ON-OFF
Driver included	YES
SAFE FLICKER	PstLM=<1 and SVM=<0.4 (IEC TR 61547-1 and IEC TR 63158), to ensure a more comfortable and safe light
Ambient temperature	0°C / +25°C

Installation

Quick tool-free mounting system for false ceiling installation from 0.5 to 30mm.

Notes

110-277Vac version available on request.

Regulations and Certifications

CE

Warranty

5 years.

Warning

Luminaire designed for disposal/recycling at end-of-life. Replaceable (LED only) light source by a professional. Replaceable control gear by a professional.

Accessories

Grid



CODE	Ø
1T1711	70mm

Anti-glare louver.
Black painted metal honeycomb structure.

To be completed with a dedicated holder ring A079.

Cut-off



CODE	Ø
1T3142	80mm

Cut-off Tube.
Allows for the beam to be focused while removing the fall-off component.

Cannot be used with versions from 48W (nominal power) - 55W (fixture power).

Screen



CODE	COLOUR
A079	●

Black polycarbonate accessory holder ring.

Mounting System



CODE	L
1T9606	2500mm

Anti-fall safety cable to secure the body of the appliance to the building structure.

TARGETTI

CCIAA Firenze
Share Capital: € 500.000,00
VAT N. (IT): 01537660480
R.E.A: FI-275656

Targetti Sankey S.r.l.
Via Giuseppe Garibaldi, 82
50041 Calenzano (FI)
Italy

Tel: +39 055 37911
targetti.com
targetti@targetti.com

Due to the technological evolution of the electronic components, the data provided may be updated, and as such, confirmation must be requested during the order process.
Luminous flux and power supply have +/-10% tolerances with respect to the indicated value. tq +25°C (CIE 121).

We reserve the right to make technical changes.