TRACK PROJECTORS

Capsule Ø 60



Code
1TD0004EL

LIGHT COLOUR	LIGHT DISTRIBUTION	OUTPUT
4000K 90	Multioptic 18°, 39°	20.2W 2158-2224lm

POWER SUPPLY CONTROL	COLOUR
220-240Vac ON-OFF	

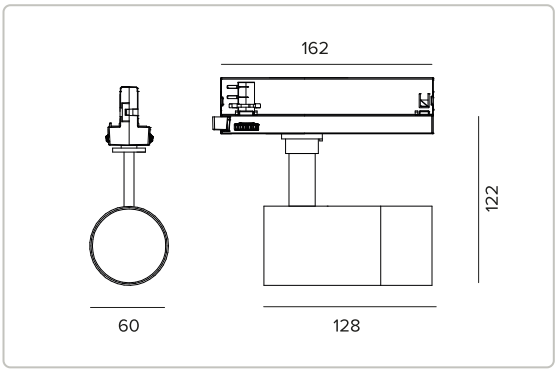

The figures on the drawing are expressed in mm.

0.43 IP20

The fixture's photometric values can be found on the following pages

Technical Data

Concept

Adjustable LED projector.

Source

High efficiency Chip on Board LED Ra90.	
Energy efficiency class	C
Nominal power	18W
Nominal flux	2488lm
Colour rendering index	90
CCT nominal	4000K
Lifetime (L80/B10)	56000h tq +25°C
Lifetime (L90/B10)	56000h tq +25°C

TARGETTI

CCIAA Firenze
Share Capital: € 500.000,00
VAT N. (IT): 01537660480
R.E.A: FI-275656

Targetti Sankey S.r.l.
Via Giuseppe Garibaldi, 82
50041 Calenzano (FI)
Italy

Tel: +39 055 37911
targetti.com
targetti@targetti.com

Due to the technological evolution of the electronic components, the data provided may be updated, and as such, confirmation must be requested during the order process.
Luminous flux and power supply have +/-10% tolerances with respect to the indicated value. tq +25°C (CIE 121).

We reserve the right to make technical changes.

Technical Data

Illuminotechnical characteristics

Optical unit equipped with a FL lens inside the product and an interchangeable SP lens.

Optic	Multioptic
Beam angles	SP, FL
Optical efficiency	See photometries
Fixture flux	See photometries
Luminous efficacy	See photometries
Photobiological safety	Compliant with RG1 low risk group

Mechanical characteristics

Black painted die-cast aluminium body. Optical frame adjustable from 0° to 90° on the vertical plane, 355° on the horizontal plane.

Colour and finish	Black
Dimensions	ØxH 60x128mm
Weight	0.43Kg
Version	6
Degree of protection	IP20

Electrical characteristics

Integrated electronic power supply.

Fixture Power	20.2W
Power supply	220-240Vac 50/60Hz
Insulation Class	CLASS 2
Type of driver / Control	ON-OFF
Driver included	YES
SAFE FLICKER	PstLM=<1 and SVM=<0.4 (IEC TR 61547-1 and IEC TR 63158), to ensure a more comfortable and safe light
Ambient temperature	0°C / +25°C

Regulations and Certifications

CE

Warranty

5 years.

Warning

Luminaire designed for disposal/recycling at end-of-life. Replaceable (LED only) light source by a professional. Replaceable control gear by a professional.

Photometries

SP

Fixture flux	2158lm
Luminous efficacy	107lm/W
Optical efficiency	86.74%

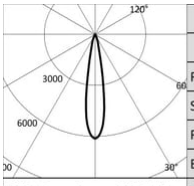

4000K		H(m)	D(m)	Emax(lx)
Ra90			18°	
Fixture Power	20W	1	0.32	15218
Source Flux	2488lm	2	0.65	3804
Fixture Flux	2158lm	3	0.97	1691
Efficacy	107lm/W	4	1.29	951
TS1692 Imax=6116cd/klm	Imax 15218cd	5	1.62	609

FL

Fixture flux	2224lm
Luminous efficacy	110lm/W
Optical efficiency	89.4%

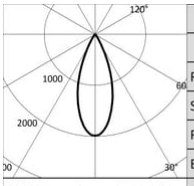

4000K		H(m)	D(m)	Emax(lx)
Ra90			39°	
Fixture Power	20W	1	0.70	4930
Source Flux	2488lm	2	1.41	1232
Fixture Flux	2224lm	3	2.11	548
Efficacy	110lm/W	4	2.82	308
TS1693 Imax=1981cd/klm	Imax 4930cd	5	3.52	197

TARGETTI

CCIAA Firenze
Share Capital: € 500.000,00
VAT N. (IT): 01537660480
R.E.A: FI-275656

Targetti Sankey S.r.l.
Via Giuseppe Garibaldi, 82
50041 Calenzano (FI)
Italy

Tel: +39 055 37911
targetti.com
targetti@targetti.com

Due to the technological evolution of the electronic components, the data provided may be updated, and as such, confirmation must be requested during the order process.
Luminous flux and power supply have +/-10% tolerances with respect to the indicated value. tq +25°C (CIE 121).

We reserve the right to make technical changes.